seeed studio

INDUSTRIAL PRODUCT DATASHEET

Fashionstar TTL-USB Converter UC-01

The Fashionstar TTL-USB Converter UC-01 provides half-duplex to full-duplex TTL conversion with selectable 3.3V/5.0V levels and reverse polarity protection for industrial IoT, smart home, automotive, and other applications.

SKU	UPDATED	PRICE
100018751	2026-11-11 06:38:10	$10.00(Excl. VAT)



Overview



The Fashionstar TTL-USB Converter UC-01 supports half-duplex to full-duplex TTL signal conversion with selectable 3.3V/5.0V TTL levels, enabling ID configuration and parameter adjustment for bus servo as well as communication between TTL devices and PCs or other host platforms. It provides reverse polarity protection and is suitable for applications such as smart metering, asset tracking, wearables, industrial IoT, smart home, smart city, healthcare, automotive, telematics, and POS.

Key Features

01 **Supports half-duplex to full-duplex TTL signal conversion**

02 **Selectable TTL levels**

3.3V / 5.0V

03 **Enables ID configuration and parameter adjustment for bus servo**

04 **Facilitates communication between TTL devices and PCs or other host platforms**

05 **Provides reverse polarity protection to enhance circuit safety**

Product Gallery









Hardware Overview

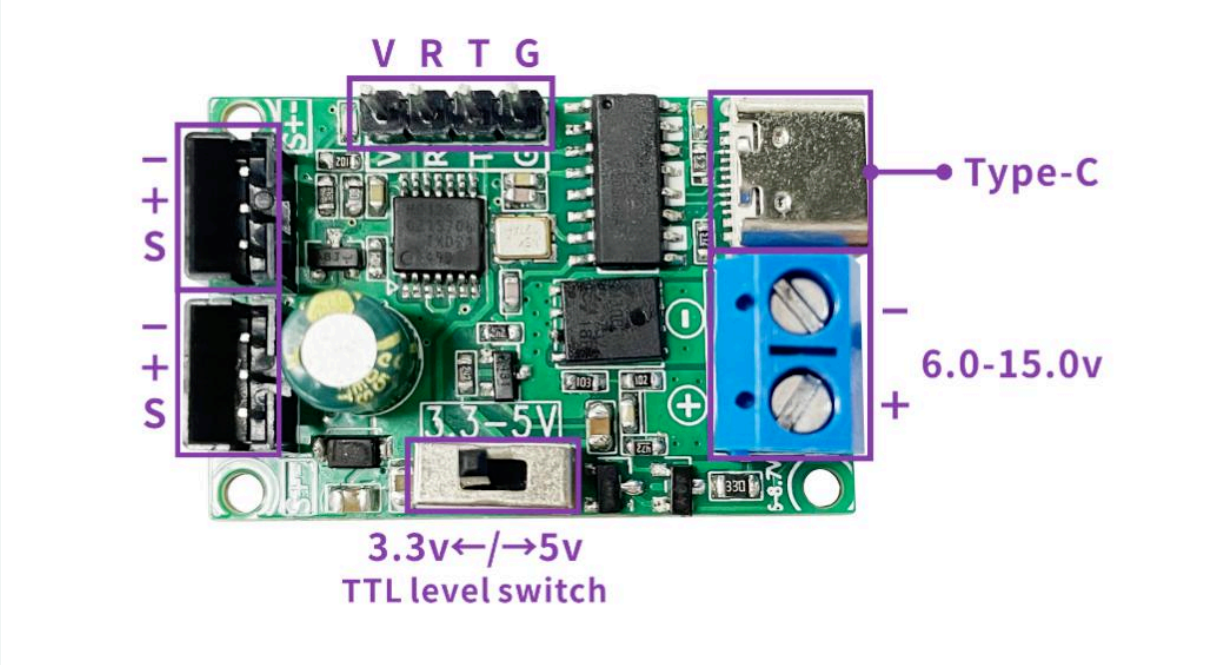

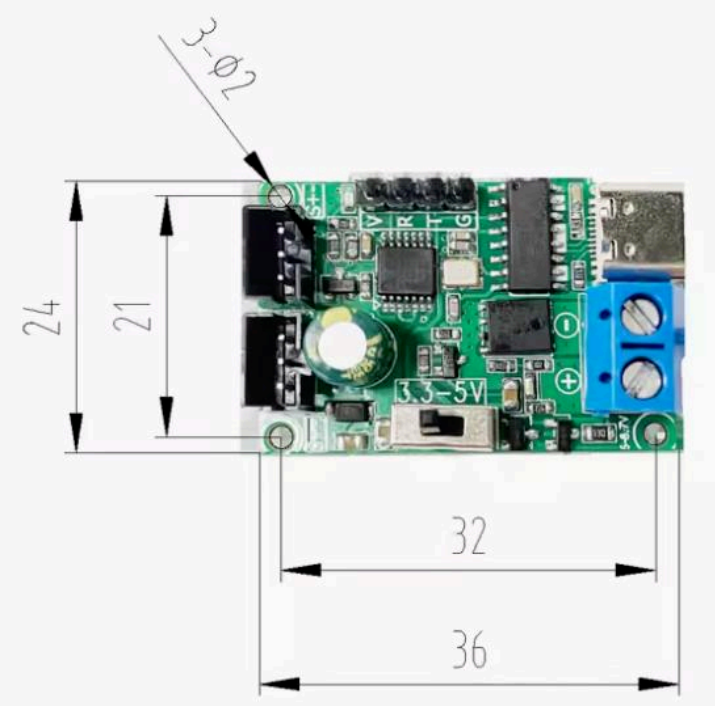

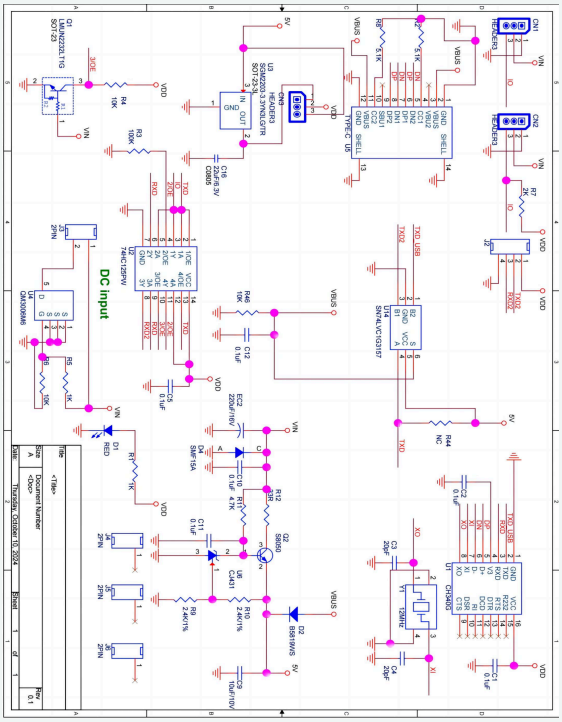

Applications

- Smart metering
- Asset tracking
- Wearables
- Industrial IoT
- Smart home
- Smart city
- Healthcare
- Automotive
- Telematics
- POS

Resource Links

- https://www.seeedstudio.com/Fashionstar-TTL-USB-Converter-UC-01-p-6513.html
- https://files.seeedstudio.com/products/Fashionstar/UC01_Datasheet_EN_V1.1.07.pdf

Seeed Technology Co.,Ltd.
9F, Building G3, International E City,
Zhongshanyuan Road, Nanshan, Shenzhen, China

Tel: +86 0755-80695676
Web: www.seeed.cc
Shop: www.seeedstudio.com