seeed studio

INDUSTRIAL PRODUCT DATASHEET

Wio-WM1302 LoRaWAN Gateway Module (SPI) - AS923

Wio-WM1302 LoRaWAN Gateway Module (SPI) - AS923 – a high-performance, low-power Mini-PCIe LoRaWAN gateway module powered by Semtech® SX1302 with CE, FCC, and TELEC certifications.

SKU	UPDATED	PRICE
100021717	2026-11-11 09:21:38	$19.90(Excl. VAT)



Overview



The Wio-WM1302 LoRaWAN Gateway Module (SPI) - AS923 is powered by Semtech® SX1302 baseband LoRa® chip, featuring a Mini-PCIe form factor with standard 52-pin golden finger for easy integration. It offers high sensitivity down to -139 dBm @SF12 with SX1250 TX/RX front-end, TX power up to 26 dBm @3.3V, and is certified with CE(EU868), FCC ID(US915), and TELEC(AS923).

Key Features

01 **Go from Module Selection to a Working Project**

02 **See Modules, Resources, and Real Projects →**

03 **Powered by Semtech® SX1302 baseband LoRa® chip, extremely low power consumption and high performance.**

04 **Mini-PCIe form factor with the standard 52-pin golden finger, easy to integrate with various gateway devices.**

05 **Ultra-low operating temperature, no additional heat dissipation needed, reducing the size of LoRaWAN gateway.**

06 **High sensitivity down to -139 dBm @SF12 with SX1250 TX/RX front-end; TX power up to 26 dBm @3.3V.**

07 **Certified with CE(EU868), FCC ID(US915), and TELEC(AS923).Simplify the final product certification process.**

Product Gallery





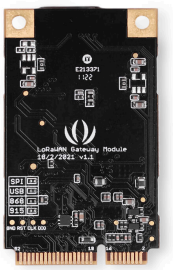

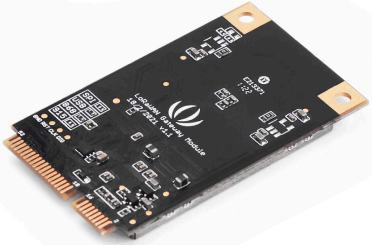



Hardware Overview

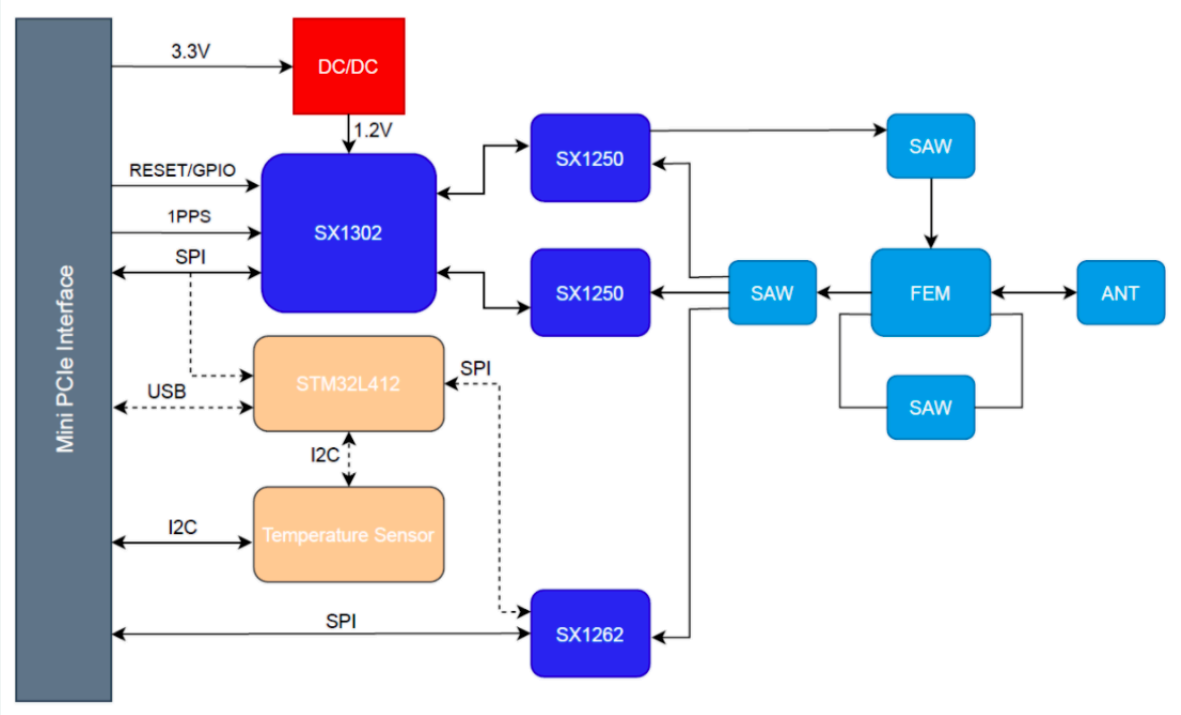

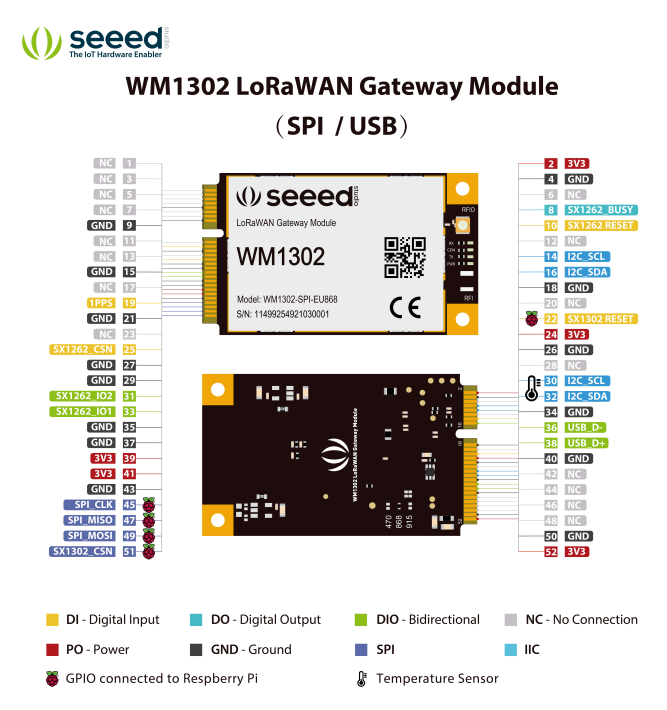

No.	Mini PCIe Pin	WM1302 Pin	IO type	Function
1	WAKE#	NC		
2	3.3Vaux	3V3	Power	
3	COEX1	NC		
4	GND	GND	Ground	
5	COEX2	NC		
6	1.5 V	NC		
7	CLKREQ#	NC		
8	UIM_PWR	SX1262_BUSY	DO	SX1262 BUSY Pin
9	GND	GND	Ground	
10	UIM_DATA	SX1262_RST	DI	SX1262 Reset Pin
11	REFCLK-	NC		
12	UIM_CLK	NC		
13	REFCLK+	NC		
14	NIM_RESET	I2C_SCL	DI	Temperature Sensor I2C Clock
15	GND	GND	Ground	
16	UIM_VPP	I2C_SDA	DIO	Temperature Sensor I2C Data
17	Reserved	NC		
18	GND	GND	Ground	
19	Reserved	1PPS	DI	GPS 1PPS
20	W_DISABLE#	NC		
21	GND	GND		
22	PERST#	RESET	DI	SPI version: Active HIGH; USB version: Active LOW
23	PERn0	NC		
24	3.3Vaux	3V3	Power	
25	PERp0	SX1262_CSN	DI	SX1262 Chip Select
26	GND	GND	Ground	
27	GND	GND	Ground	
28	1.5V	NC		
29	GND	GND	Ground	
30	SMB_CLK	I2C_SCL	DI	Temperature Sensor I2C Clock
31	PETn0	SX1262_IO2	DIO	SX1262 DIO2 Pin
32	SMB_DATA	I2C_SDA	DIO	Temperature Sensor I2C Data
33	PETp0	SX1262_IO1	DIO	SX1262 DIO1 Pin
34	GND	GND	Ground	
35	GND	GND	Ground	
36	USB_D-	USB_D-	DIO	USB differential data -
37	GND	GND	Ground	
38	USB_D+	USB_D+	DIO	USB differential data +
39	3.3Vaux	3V3	Power	
40	GND	GND	Ground	
41	3.3Vaux	3V3	Power	
42	LED_WWAN#	NC		
43	GND	GND	Ground	
44	LED_WLAN#	NC		
45	Reserved	SPI_SCK	DI	SPI Clock
46	LED_WPAN#	NC		
47	Reserved	SPI_MISO	DO	SPI MISO
48	1.5V	NC		
49	Reserved	SPI_MOSI	DI	SPI MOSI
50	GND	GND	Ground	
51	Reserved	SX1302_CSN	DI	SX1302 Chip select
52	3.3Vaux	3V3	Power	

Applications

- **LPWAN Gateway devices development**
- **Any long-distance wireless communication application development**
- **LoRa and LoRaWAN application learn and research**

Resource Links

- https://www.seeedstudio.com/Wio-WM1302-LoRaWAN-Gateway-Module-SPI-AS923-p-6586.html
- Semtech SX1302 datasheet

Seeed Technology Co.,Ltd.
9F, Building G3, International E City,
Zhongshanyuan Road, Nanshan, Shenzhen, China

Tel: +86 0755-80695676
Web: www.seeed.cc
Shop: www.seeedstudio.com