seeed studio

INDUSTRIAL PRODUCT DATASHEET

Fashionstar HA8-U25H-M servo

Fashionstar HA8-U15H-M Servo is a 12V 25kg single-shaft serial bus servo with bracket that integrates brushless motor, reducer, magnetic absolute encoder and controller.

SKU	UPDATED	PRICE
100094864	2026-11-11 09:20:03	$18.00(Excl. VAT)

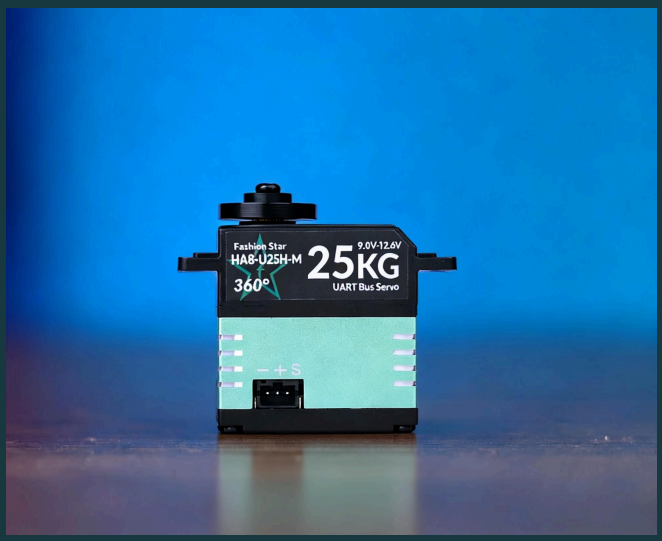

Overview



Fashionstar HA8-U15H-M Servo is a 12V 25kg single-shaft serial bus servo with bracket that integrates brushless motor, reducer, magnetic absolute encoder and controller. With a 273:1 reduction ratio, the servo's stall torque comes at 25 kg. cm and the rated torque at 3.4kg. cm. Designed for versatility, it is suited for use in industrial automation, robotics, and low-torque drive applications. It comes with ample code examples that can help accelerate deployment and integration.

Key Features

01 **Integrated Design**

Provides Integrated design of brushless motor, reducer, magnetic absolute encoder and controller

02 **12-bit absolute encoder**

Includes 12-bit magnetic absolute encoder, supporting arbitrary angle setting as the zero-position and multi-turn angle control

03 **Angle memory Ensures position data is retained after power-off.**

04 **Smooth motion curve Trapezoidal acceleration and deceleration control profile generates a smoothed motion curve**

05 **Comprehensive protection features**

Provides comprehensive protection functions including thermal shutdown, voltage protection, stall detection, and current/power limitation

Product Gallery














seeed studio
25KG
360°
26 mm
48 mm
56 mm

Hardware Overview

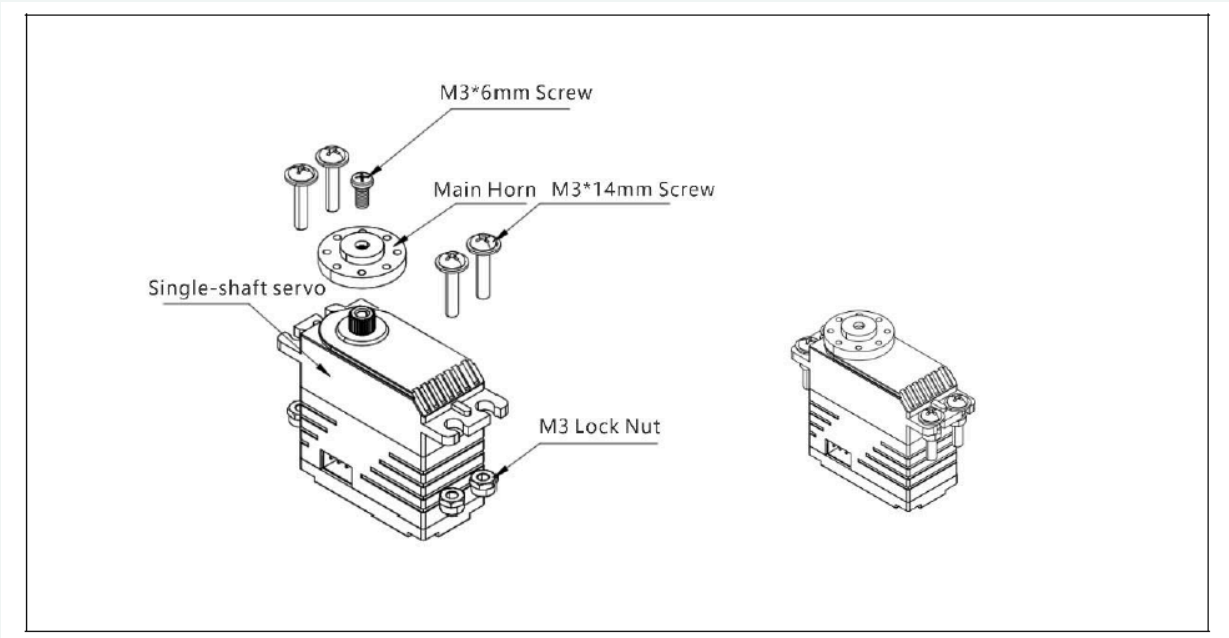

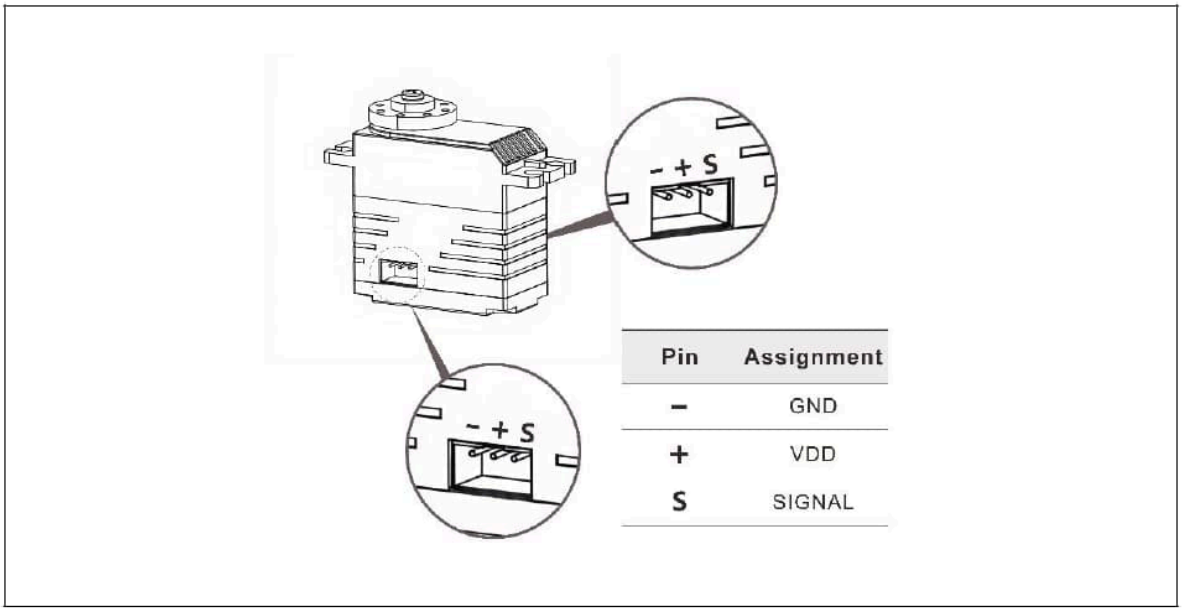

Pin	Assignment
-	GND
+	VDD
S	SIGNAL

Applications

- **Robotic Arm**

Resource Links

- https://www.seeedstudio.com/HA8-U25H-M-Servo-25kg-p-6520.html
- Datasheet
- CAD

Seeed Technology Co.,Ltd.
9F, Building G3, International E City,
Zhongshanyuan Road, Nanshan, Shenzhen, China

Tel: +86 0755-80695676
Web: www.seeed.cc
Shop: www.seeedstudio.com