seeed studio

INDUSTRIAL PRODUCT DATASHEET

Non-invasive AC Current Transformer 70A-1V

A non-invasive AC current sensor based on the current transformer principle.

SKU	UPDATED	PRICE
101990065	2026-11-11 07:43:57	$6.90(Excl. VAT)



Overview



A non-invasive AC current sensor based on the current transformer principle. It outputs voltage signals directly through a standard 3.5mm audio jack to meet the analog input requirements of oscilloscopes, Arduino, and other devices - eliminating external circuitry and simplifying hardware design.

Key Features

01 **Non-Contact Application**

Suitable for scenarios requiring non-contact current sensing, ensuring safe measurement without physical circuit interruption.

02 **Tool-Free Installation**

Easy to deploy by clamping the sensor around the target conductor, eliminating wiring modifications or specialized tools.

03 **Portable Design**

Compact and lightweight structure enables effortless integration in space-constrained environments.

04 **Broad Voltage Compatibility**

Supports a wide operating current range (5A~70A), ensuring seamless compatibility with diverse control systems.

05 **Galvanic Isolation**

Electrically isolated output prevents ground loop interference and enhances system safety in large-current environments.

Product Gallery







Hardware Overview

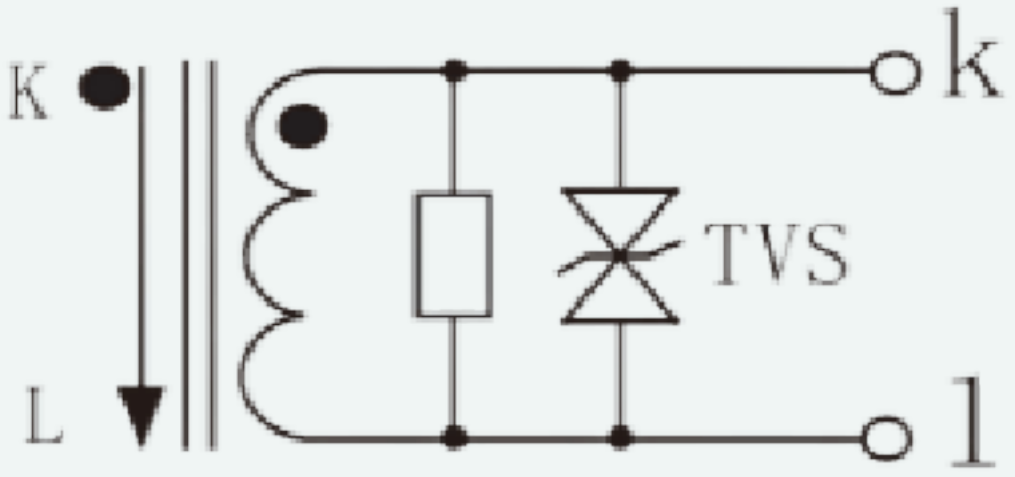

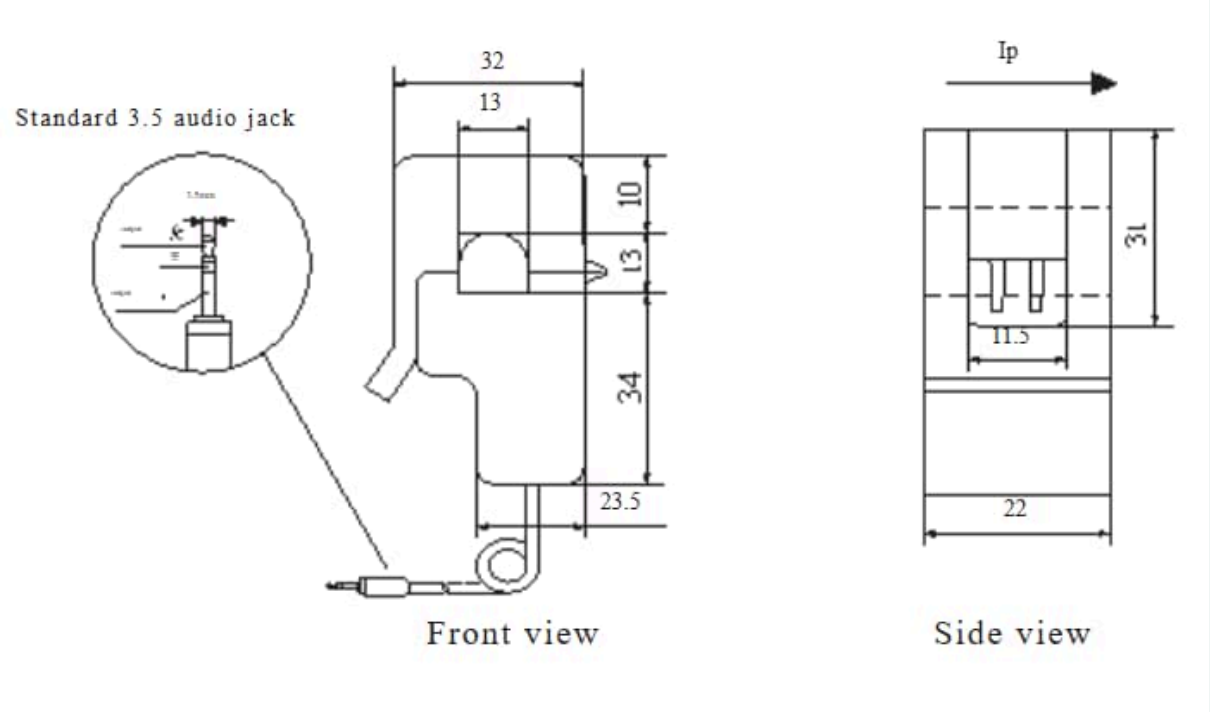

Applications

- **Suitable for the voltage measuring**
- **Monitoring and protection of AC motor**
- **Lighting equipment**
- **Air compressor**

Resource Links

- https://www.seeedstudio.com/Non-invasive-AC-Current-Sensor-70A-ma-p-2058.html
- SCT-013 Datasheet

Seeed Technology Co.,Ltd.
9F, Building G3, International E City,
Zhongshanyuan Road, Nanshan, Shenzhen, China

Tel: +86 0755-80695676
Web: www.seeed.cc
Shop: www.seeedstudio.com