seeed studio

INDUSTRIAL PRODUCT DATASHEET

Industrial Total Solar Radiation Sensor MODBUS-RTU RS485, Solar Radiation Meter

The IP68 RS485 Total Solar Radiation Sensor measures real-time solar total radiation from 300 to 1100 nanometers.

SKU	UPDATED	PRICE
101991047	2026-11-18 01:04:25	$149.00(Excl. VAT)



Overview



The IP68 RS485 Total Solar Radiation Sensor measures real-time solar total radiation from 300 to 1100 nanometers. It's ideal for environmental monitoring and agriculture. Pair it with the SenseCAP Sensor Hub 4G Data Logger or SenseCAP S2100 LoRaWAN® Data Logger for seamless data collection and management.

Key Features

01 **Easy to Use**

Compact size, simple installation, quick integration

02 **High Performance**

±3% accuracy, fast response, exceptional stability (<2% variation in one year), within 0-2000 W/m² range.

03 **Strong Robustness**

It's watertight and dustproof with IP68 Enclosure, and can operate under a wide range of temperatures from -30°C to 75°C

04 **Supports Universal MODBUS RS485 Protocol**

Can be easily connected to MODBUS-RTU RS485 data loggers.

05 **Wide-range Power Supply**

Can be powered with supply voltage within 5~24V DC

Product Gallery







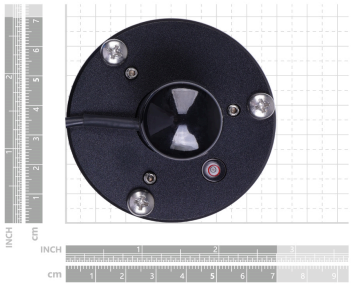



Hardware Overview

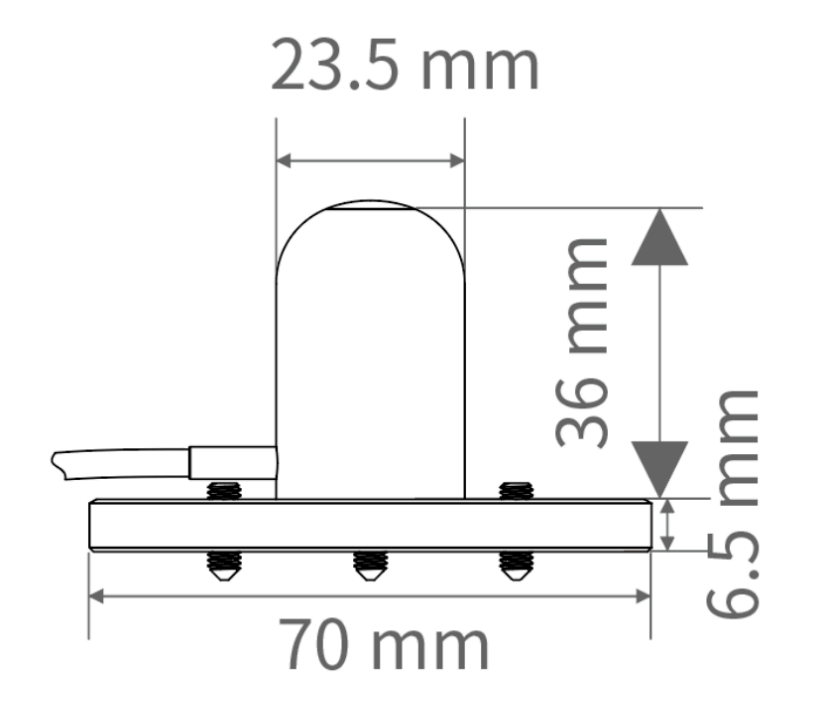

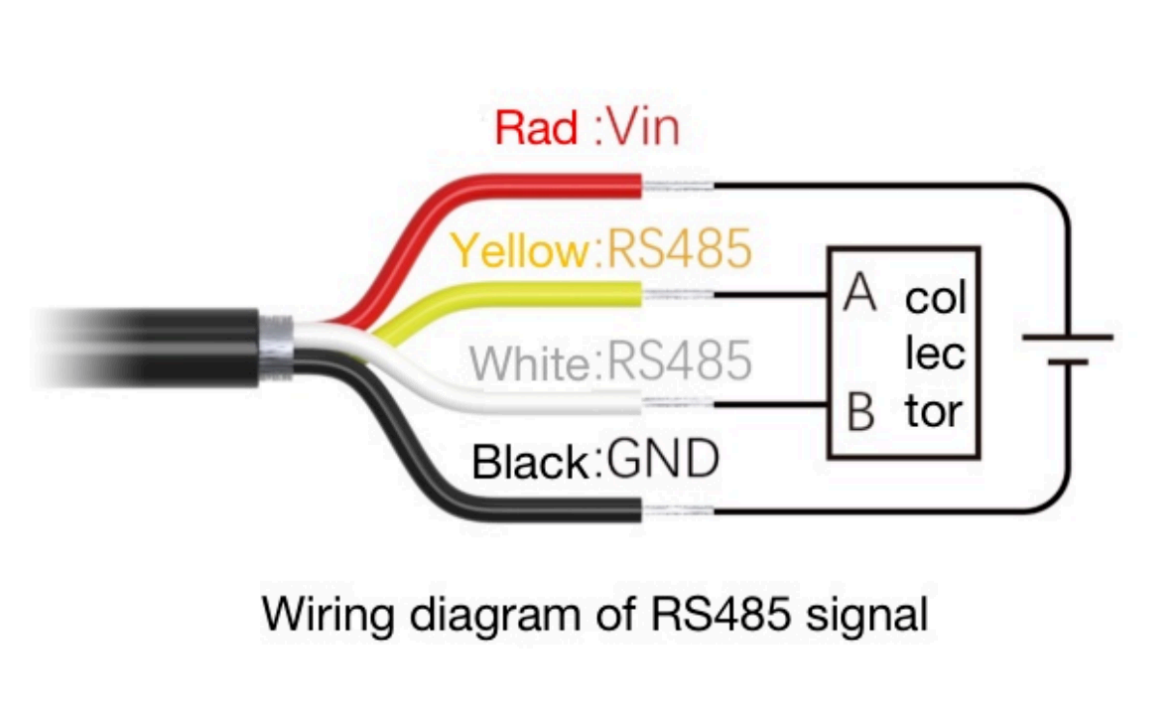

Wiring diagram of RS485 signal

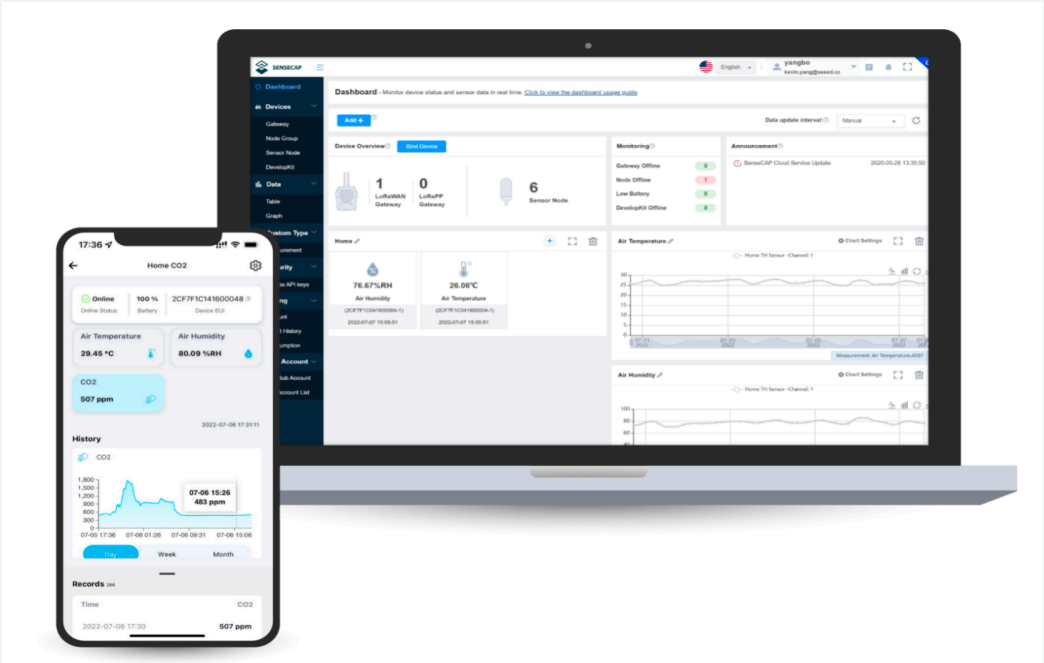

Configuration and Remote Monitoring

4G Installation Plan

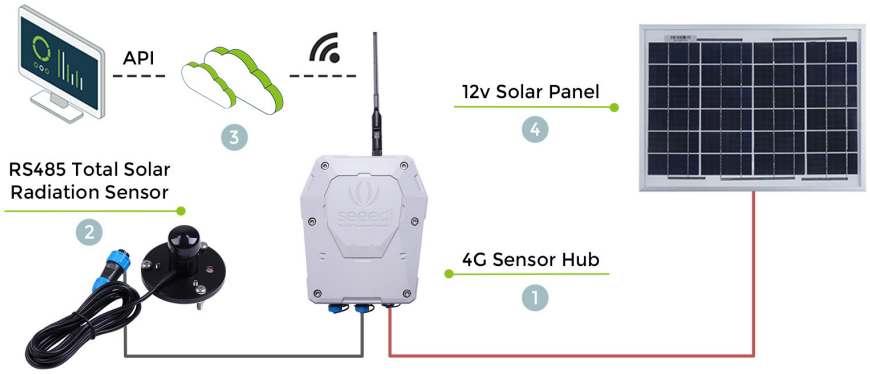

1. Insert the SIM card into the 4G sensor hub and install the antenna.
2. Unscrew the protective cover, plug the sensor into the RS-485 connector.
3. Configure the Device to Connect to SenseCAP Cloud Platform.
4. Connect the Power Cord.

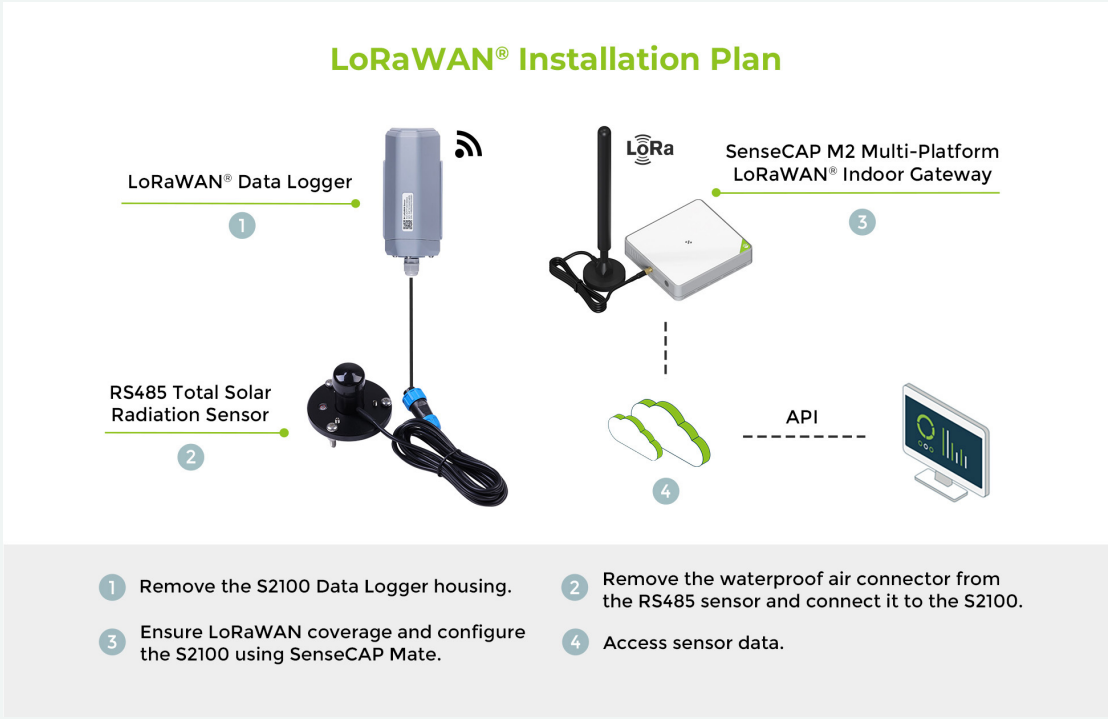

Applications

- **Weather Monitoring: Measures solar, ground, and atmospheric radiation, aiding weather forecasting and research.**
- **Agricultural Study: Explores agricultural meteorology, crop growth, and ecology.**
- **Environmental Monitoring: Tracks radiation levels to assess environmental impact.**
- **Energy Research: Supports solar and other energy studies by analyzing radiation conditions.:** Measuring total solar radiation is crucial in multiple fields, providing essential data for weather prediction, climate study, solar energy utilization, agriculture, and environmental research. It directly impacts climate trends, solar panel efficiency, crop growth, and energy project feasibility.
- **For instance, in agriculture, plants respond uniquely to solar radiation, making accurate measurements invaluable for optimizing irrigation, fertilization, and planting strategies based on photosynthesis and lighting needs.**

Resource Links

- https://www.seeedstudio.com/RS485-p-5691.html
- Total Solar Radiation Sensor Datasheet

Seeed Technology Co.,Ltd.
9F, Building G3, International E City,
Zhongshanyuan Road, Nanshan, Shenzhen, China

Tel: +86 0755-80695676
Web: www.seeed.cc
Shop: www.seeedstudio.com