seeed studio

INDUSTRIAL PRODUCT DATASHEET

Seeed Studio XIAO RP2350 (Pre-Soldered)

This is the pre-soldered version of XIAO RP2350， which packs the power of the Raspberry Pi RP2350 (switchable architecture of dual Arm Cortex-M33 cores running at 150MHz with FPU, and dual open-hardware Hazard3 RISC-V cores,...

SKU	UPDATED	PRICE
102010637	2026-11-11 09:11:31	$5.90(Excl. VAT)



Overview



This is the pre-soldered version of XIAO RP2350， which packs the power of the Raspberry Pi RP2350 (switchable architecture of dual Arm Cortex-M33 cores running at 150MHz with FPU, and dual open-hardware Hazard3 RISC-V cores, enhanced security and encryption) into the classic XIAO form factor. Measuring just 21x17.8102010550mm, it features 19 multifunction GPIOs, an RGB LED, and a Battery Management System with battery power supply, and direct battery voltage measurement. Thanks to the XIAO ecosystem, the XIAO RP2350 is compatible with a wide range of add-ons, including displays, LED matrix, Grove modules, CAN Bus, Vision AI sensors, and mmWave sensors. With native support for MicroPython, C, and C++, the XIAO RP2350 is perfect for developers of all levels looking to create compact, battery-powered applications for smart control, wearables, DIY keyboards, and more.

Key Features

01 **Powerful MCU Board**

Equipped with a Raspberry Pi RP2350 chip featuring dual-core, dual-architecture capability, allowing developers to switch between the dual industry-standard Arm Cortex-M33 cores @ 150MHz with FPU, and a pair of open-hardware Hazard3 RISC-V cores

02 **Enhanced Security Features**

Built-in secure boot and encrypted bootloader ensure application security.

03 **Software Support**

Compatible with C/C++ and MicroPython, ensuring easy project development and prototyping.

04 **Rich Onboard Resources**

Integrates an RGB LED, 2MB Flash, 520kB SRAM, and 19 multifunction GPIOs(Analog, Digital, I²C, UART, SPI, PWM).

05 **Expanded 8 New IOs**

Compared to previous XIAO MCUs, the addition of 8 IO pins on the back supports more complex applications.

06 **Efficient Power Design**

Enabling battery power supply. Direct battery voltage measurement via internal IO enhances the battery management system (BMS).

07 **Compact Thumb-Sized Design**

Measuring 21 x 17.8mm, adopting Seeed Studio's classic XIAO form factor, ideal for space-conscious applications.

08 **Production-friendly**

Surface Mount Device (SMD) design with all components on the front and stamp holes on both sides, facilitating efficient mass production.

Product Gallery







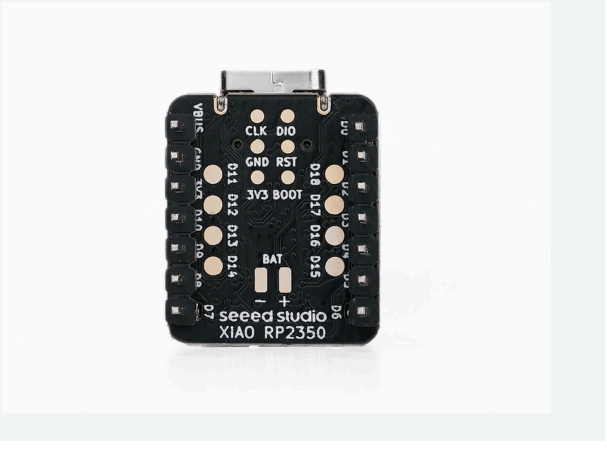

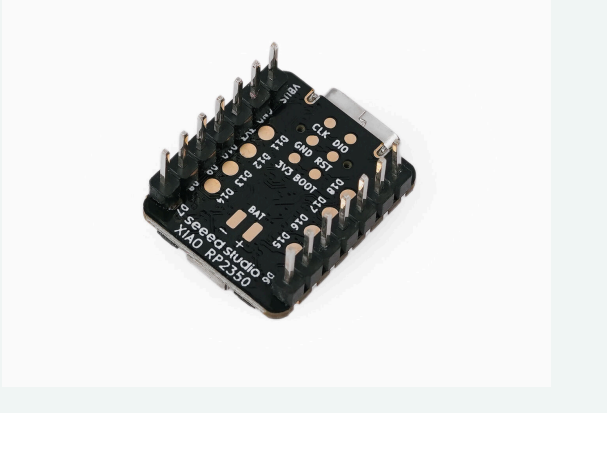



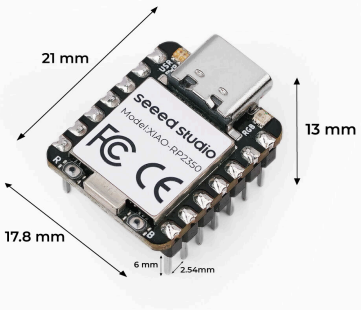
21 mm
13 mm
17.8 mm
6 mm
2.54mm
Seeed Studio
Model:XIAO-RP2350

Hardware Overview

Front

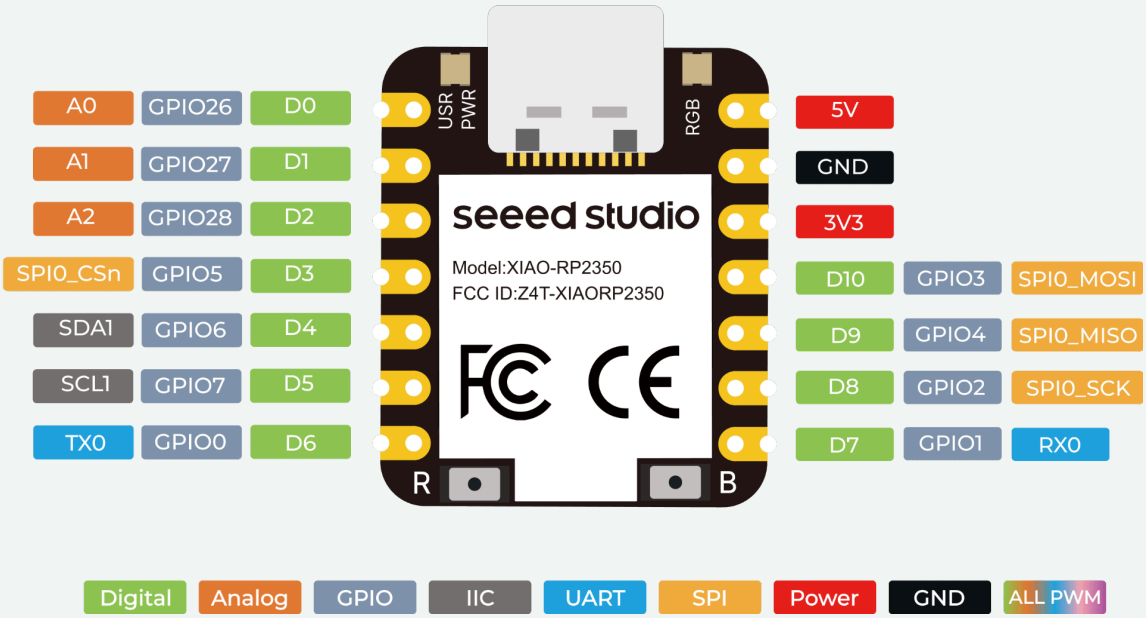

Back

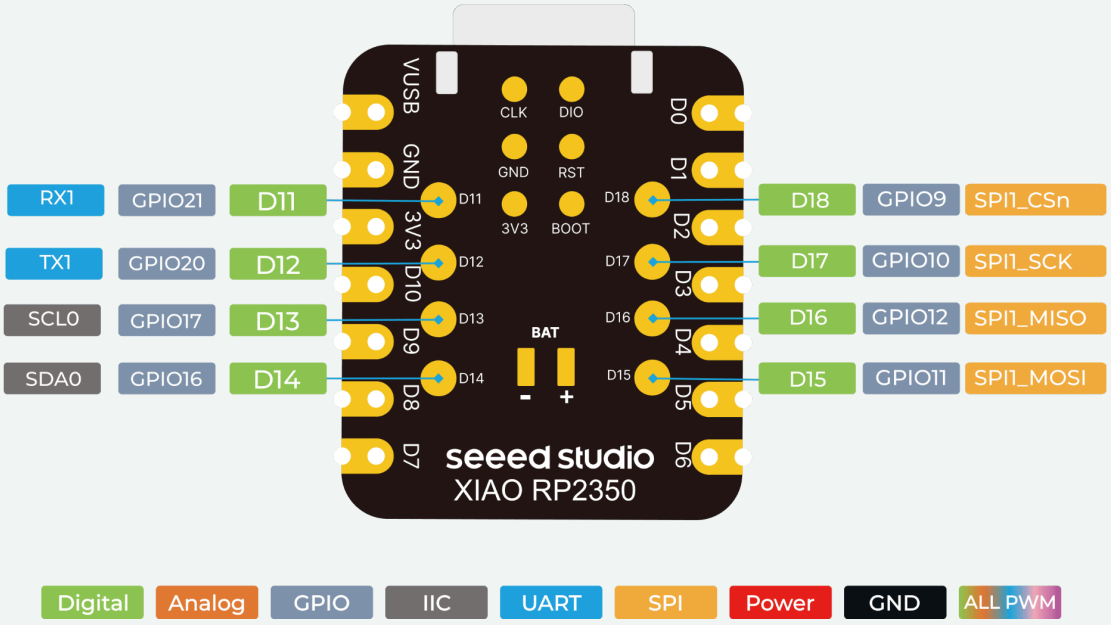

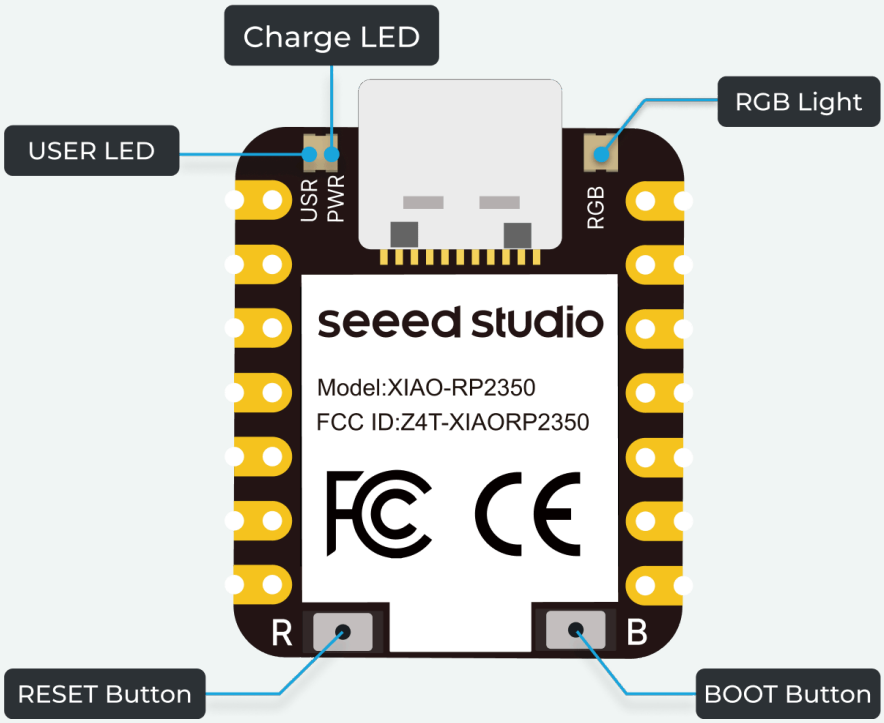

Applications

- **Smart Control**
- **Human Interface Devices (HID, such as mouse, DIY Mechanical Keyboard, joystick, console)**
- **Education**
- **Robotics**
- **Wearables**

Resource Links

- https://www.seeedstudio.com/Seeed-Studio-XIAO-RP2350-Pre-Soldered-p-6336.html
- PCN-XIAO Series Packaging Upgrade.pdf
- Wiki-XIAO RP2350 Resources
- Seeed Studio XIAO Use Case

Seeed Technology Co.,Ltd.
9F, Building G3, International E City,
Zhongshanyuan Road, Nanshan, Shenzhen, China

Tel: +86 0755-80695676
Web: www.seeed.cc
Shop: www.seeedstudio.com