seeed studio

INDUSTRIAL PRODUCT DATASHEET

Seeed Studio XIAO nRF52840 Plus

Seeed Studio XIAO nRF52840 Plus, powered by Nordic chipset with FPU, brings more SMD pins to our popular Bluetooth-enabled board.

SKU	UPDATED	PRICE
102010672	2026-11-11 09:11:04	$10.40(Excl. VAT)



Overview



Seeed Studio XIAO nRF52840 Plus, powered by Nordic chipset with FPU, brings more SMD pins to our popular Bluetooth-enabled board. While maintaining all the capabilities of the standard version including Bluetooth Low Energy 5.4, NFC, and low power consumption, this Plus variant features redesigned castellations and pad layout on the back, offering 9 additional GPIOs specifically for advanced Bluetooth projects requiring expanded I/Os via SMD board-to-board soldering.

Key Features

01 **High-Performance MCU**

Nordic Semiconductor's nRF52840 chip with FPU at 64 MHz, multiple development ports, compatible with Arduino/CircuitPython/MicroPython

02 **Advanced Wireless Connectivity**

Bluetooth Low Energy 5.4 with built-in antenna and NFC support

03 **Efficient Power Management**

5 µA deep sleep consumption with integrated Li-ion battery charging

04 **Expanded 20 GPIOs**

9 extra 1.27mm pitch SMD castellation pins beyond standard XIAO nRF52840

05 **Universal Compatibility**

Standard backside layout (with aligned battery pads, and debugger pads) for more to-be-released XIAO expansion boards

06 **Classic XIAO Form Factor**

21 x 17.8mm design with 2.54mm pin headers, single-sided mounting for wearables and space-constrained projects

07 **XIAO Accessory Add-ons Compatibility**

Natively compatible with all the XIAO accessory add-ons of expansion, connectivity modules (LoRa, CAN_Bus, RS-485), sensors (2-Mic Array, Vision AI, mmWave Motion, Environmental sensing), and actuators (ePaper display, LED Matrix, relay and more).

08 **Production-Ready Design with Fusion PCBA Support**

Product Gallery







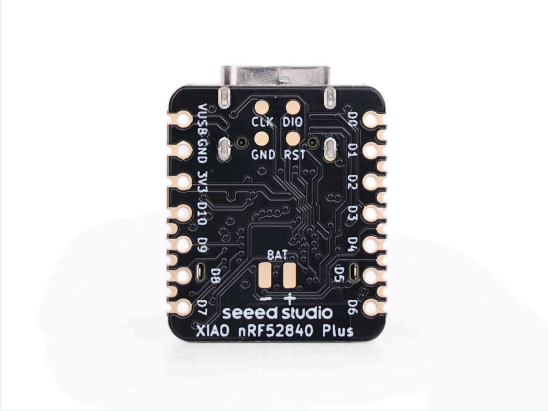

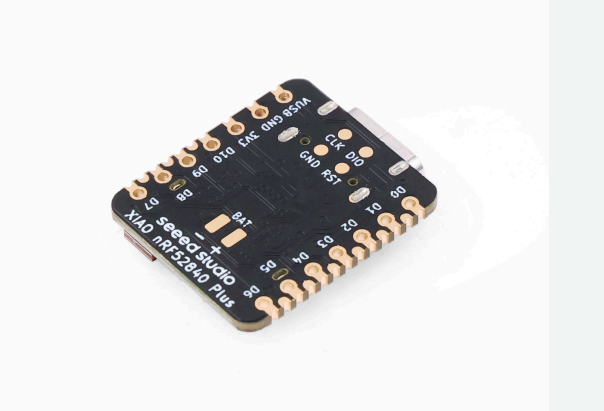



Hardware Overview

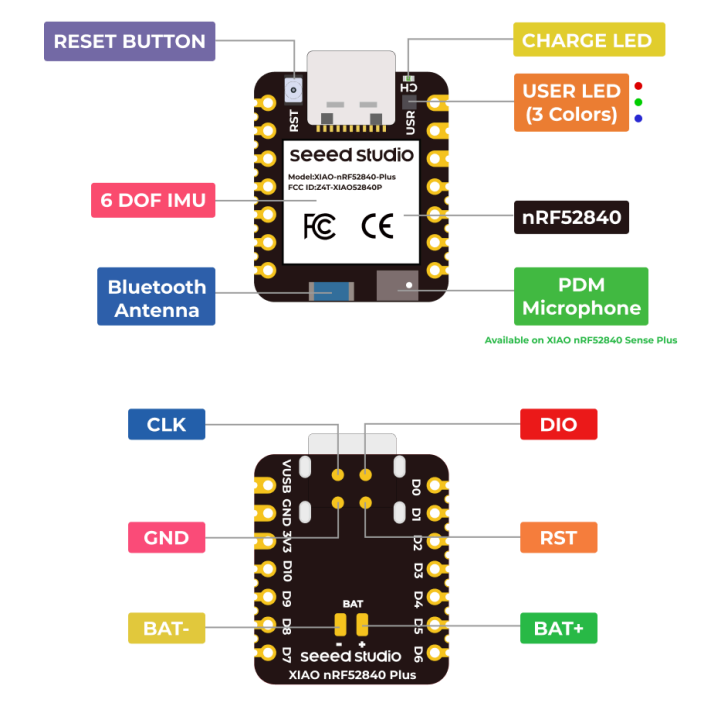

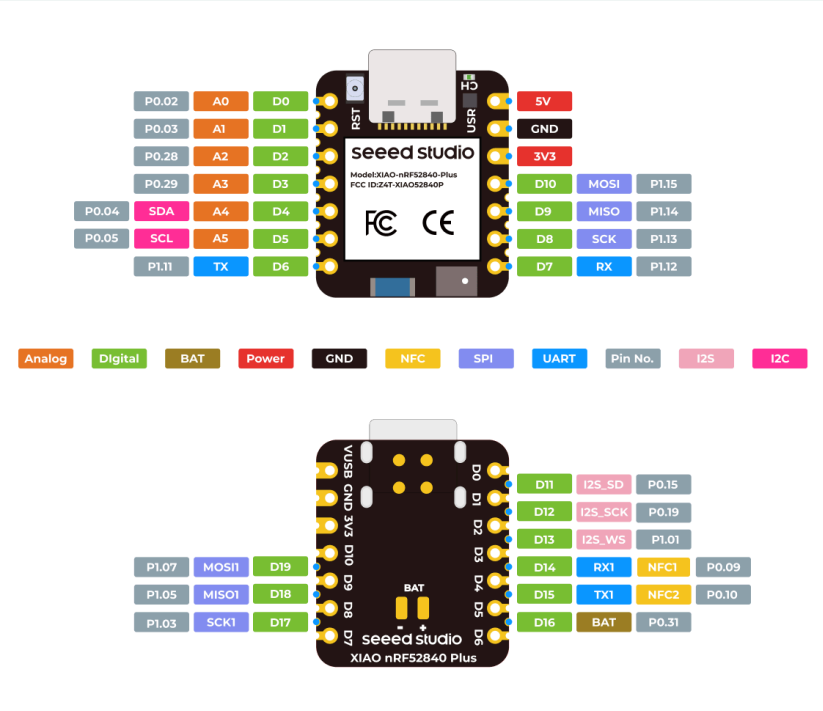

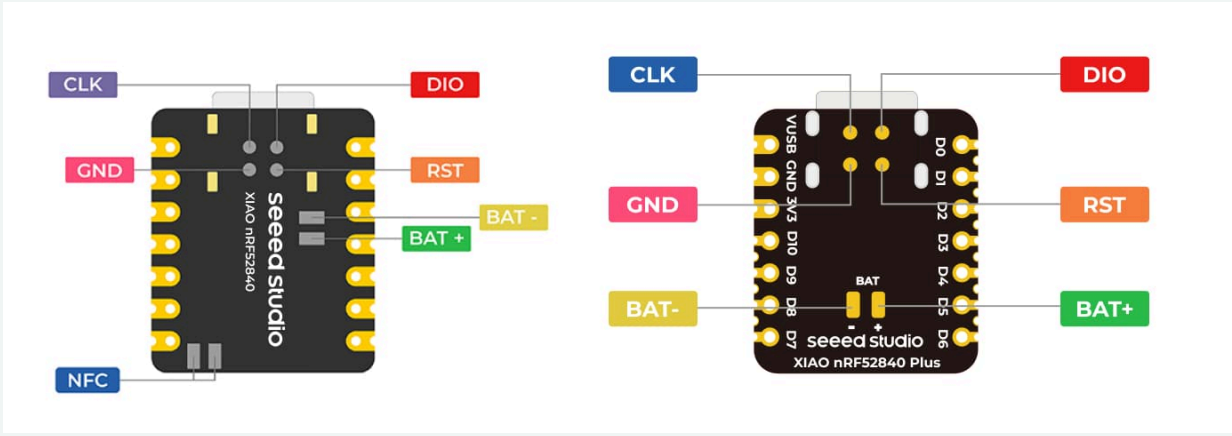

Applications

- **Wearable devices**
- **IoT Wireless devices**
- **Embedded machine learning projects**
- **Mini Arduino projects**

Resource Links

- https://www.seeedstudio.com/Seeed-Studio-XIAO-nRF52840-Plus-p-6359.html
- PCN-XIAO Series Packaging Upgrade.pdf
- Wiki-XIAO nRF52840 Series Resources
- Seeed Studio XIAO Use Case

Seeed Technology Co.,Ltd.
9F, Building G3, International E City,
Zhongshanyuan Road, Nanshan, Shenzhen, China

Tel: +86 0755-80695676
Web: www.seeed.cc
Shop: www.seeedstudio.com