seeed studio

INDUSTRIAL PRODUCT DATASHEET

Raspberry Pi 500 - DE Version

The Raspberry Pi 500 provides the ultimate compact PC experience in a high-quality keyboard form factor.

SKU	UPDATED	PRICE
102111100	2026-11-11 09:12:59	$180.00(Excl. VAT)



Overview



The Raspberry Pi 500 provides the ultimate compact PC experience in a high-quality keyboard form factor. Powered by a fast quad-core processor and 8GB of RAM, it delivers smooth 4K dual display performance for all your computing needs

Key Features

01 **Powerful Performance**

2.4GHz quad-core 64-bit Arm Cortex-A76 CPU with 8GB RAM

02 **Dual 4K Displays**

2 micro HDMI ports supporting resolutions up to 4Kp60

03 **Comprehensive Connectivity**

Dual-band Wi-Fi, Bluetooth 5.0, Gigabit Ethernet, USB 3.0

04 **High-Quality Keyboard**

Integrated 78/79/83-key compact keyboard (regional variants)

05 **Effective Cooling**

Built-in aluminum heatsink for optimum thermal management

06 **Compact Form Factor**

All-in-one computer and keyboard design for space efficiency

Product Gallery









Hardware Overview

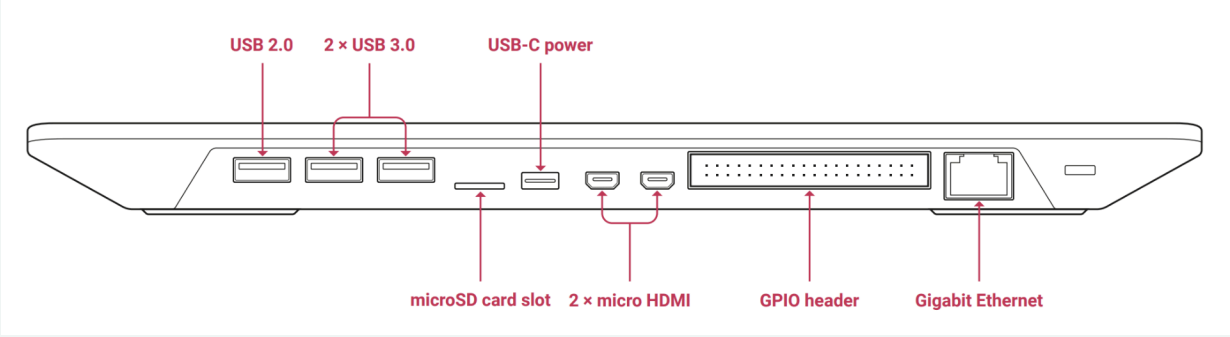

UK

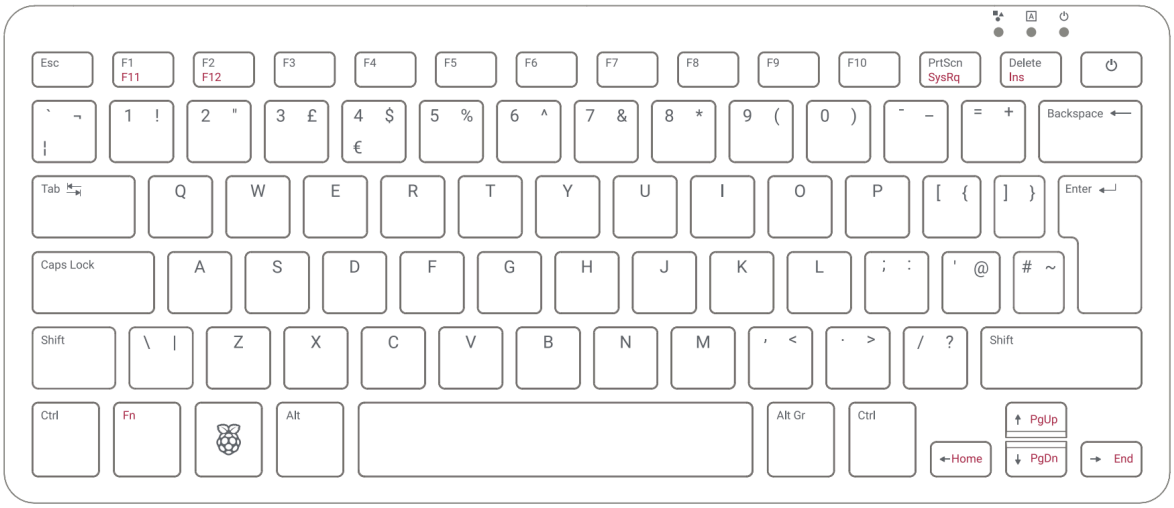

US

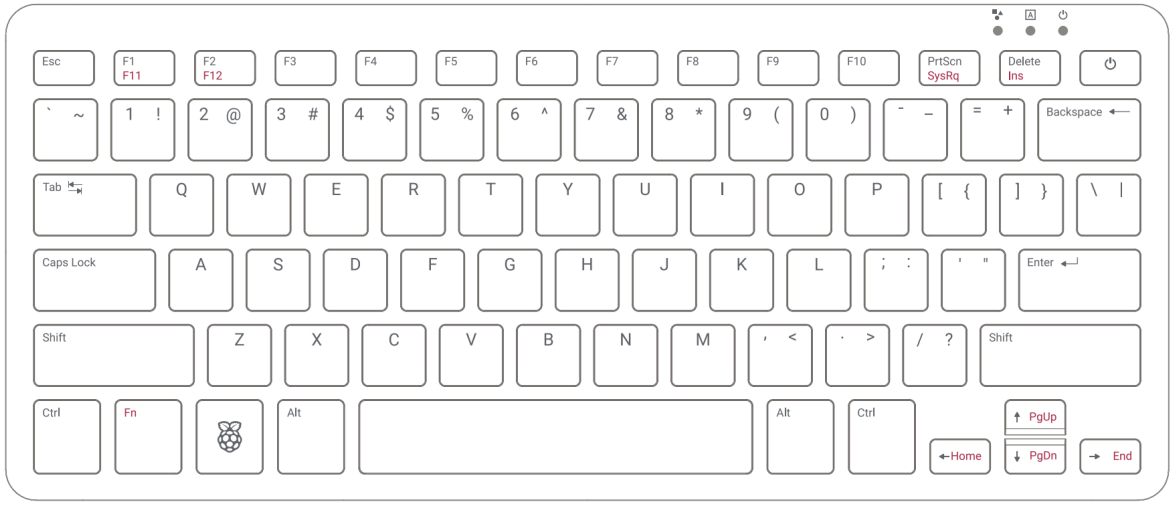

Resource Links

- https://www.seeedstudio.com/Raspberry-Pi-500-DE-p-0000.html
- Raspberry Pi 500 Announcement Blog Post
- Raspberry Pi 500 Product Brief
- Raspberry Pi 500 Documentation

Seeed Technology Co.,Ltd.
9F, Building G3, International E City,
Zhongshanyuan Road, Nanshan, Shenzhen, China

Tel: +86 0755-80695676
Web: www.seeed.cc
Shop: www.seeedstudio.com