seeed studio

INDUSTRIAL PRODUCT DATASHEET

Raspberry Pi 500 Kit - US Version

The Raspberry Pi 500 Desktop Kit provides everything you need for the ultimate compact PC experience.

SKU	UPDATED	PRICE
110061681	2026-11-11 09:13:05	$200.00(Excl. VAT)



Overview



The Raspberry Pi 500 Desktop Kit provides everything you need for the ultimate compact PC experience. This complete setup includes the powerful Raspberry Pi 500 keyboard computer, official accessories, and a beginner's guide to get you started.

Key Features

01 **Powerful Performance**

2.4GHz quad-core 64-bit Arm Cortex-A76 CPU with 8GB RAM

02 **Dual 4K Displays**

2 micro HDMI ports supporting resolutions up to 4Kp60

03 **Comprehensive Connectivity**

Dual-band Wi-Fi, Bluetooth 5.0, Gigabit Ethernet, USB 3.0

04 **High-Quality Keyboard**

Integrated 78/79/83-key compact keyboard (regional variants)

05 **Effective Cooling**

Built-in aluminum heatsink for optimum thermal management

06 **Compact Form Factor**

All-in-one computer and keyboard design for space efficiency

Product Gallery



Hardware Overview

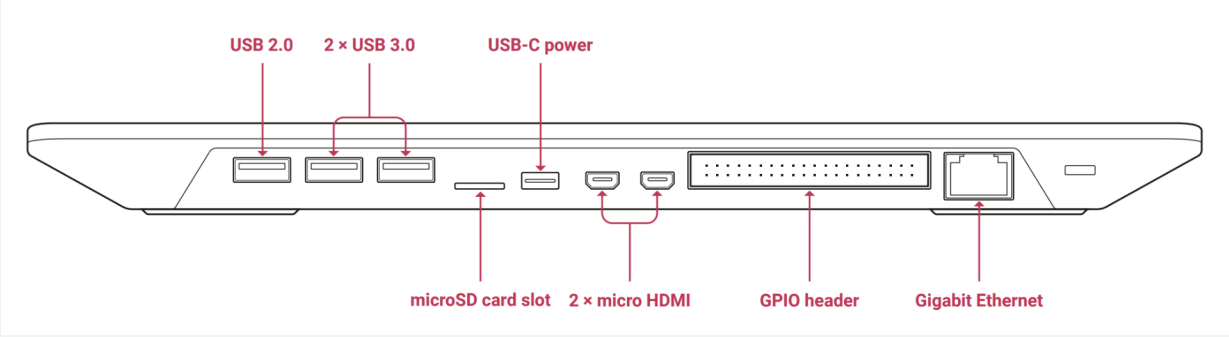

UK

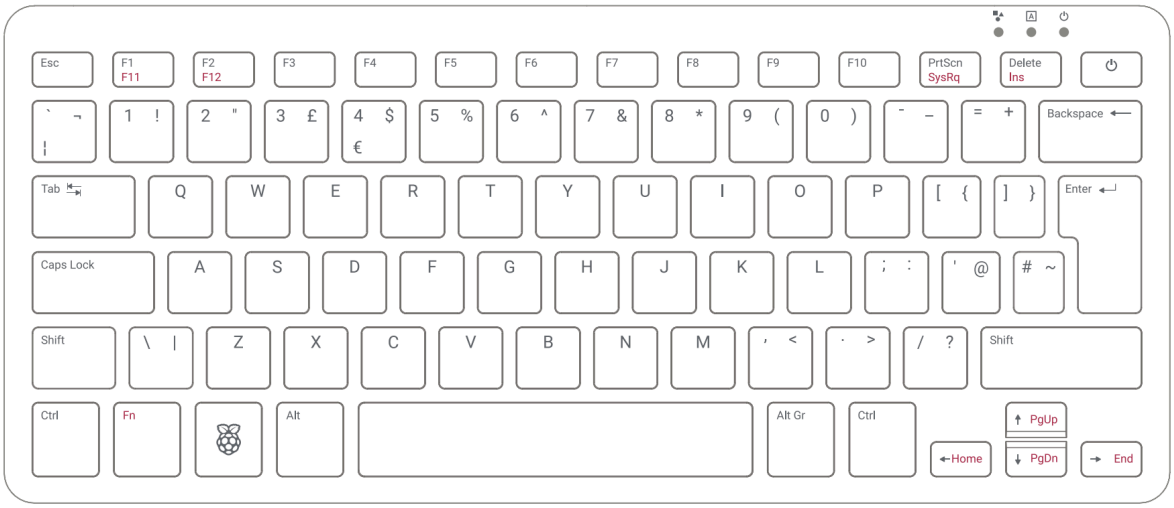

US

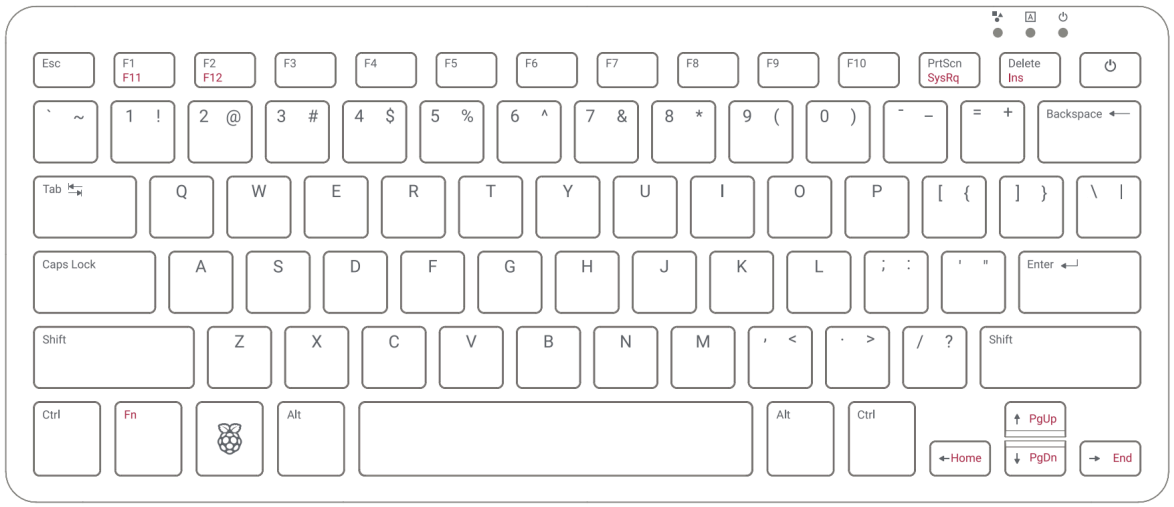

Resource Links

- https://www.seeedstudio.com/Raspberry-Pi-500-Desktop-Kit-US-p-0000.html
- Raspberry Pi 500 Announcement Blog Post
- Raspberry Pi 500 Product Brief
- Raspberry Pi 500 Documentation

Seeed Technology Co.,Ltd.
9F, Building G3, International E City,
Zhongshanyuan Road, Nanshan, Shenzhen, China

Tel: +86 0755-80695676
Web: www.seeed.cc
Shop: www.seeedstudio.com