seeed studio

INDUSTRIAL PRODUCT DATASHEET

Aluminum Heatsink with Fan for Jetson Orin NX/Orin Nano/Xavier NX Module (reComputer products only)

This Aluminum Heatsink offers essential, active, physical, and strong fan air cooling function for Jetson Orin™ NX/Orin™ Nano/Xavier NX modules, to avoid overheating and throttling problems while operating tough computing tasks.

SKU	UPDATED	PRICE
110991904	2026-11-18 08:47:08	$19.90(Excl. VAT)

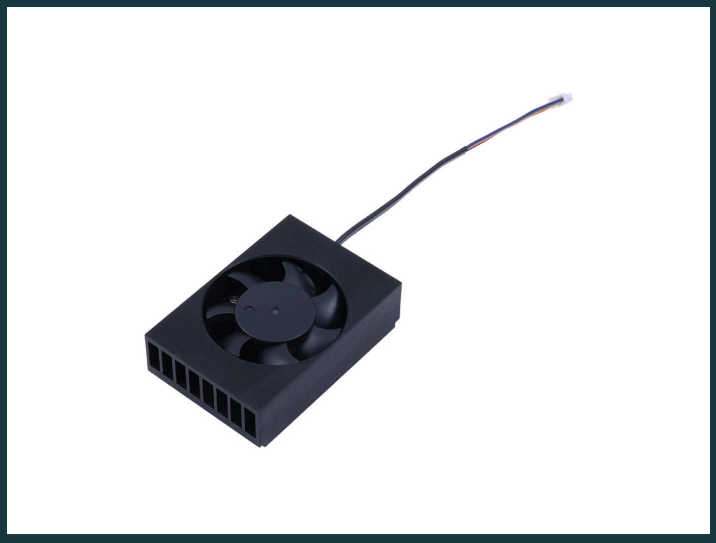

Overview



This Aluminum Heatsink offers essential, active, physical, and strong fan air cooling function for Jetson Orin™ NX/Orin™ Nano/Xavier NX modules, to avoid overheating and throttling problems while operating tough computing tasks. It is designed for continuous deployment. It can be customized to air flow speed through PWM function and supports reComputer J401 board official. CANNOT be used on A603 board directly. Would need extension wire.

Key Features

01 **CANNOT be used on A603 board. Would need extension wire.**

02 **Compatible Fan for Jetson**

Support Orin NX/Orin Nano/Xavier NX Module

03 **Essential for Tough Computing Tasks**

Keeps module temperatures low to avoid overheating and throttling

04 **Effective thermal management**

Design in full aluminum alloy heatsink

05 **Convenient Installation**

Mounting Holes & Screws Included

06 **Customized Air Speed**

Utilize PWM to control the fan speed

Product Gallery









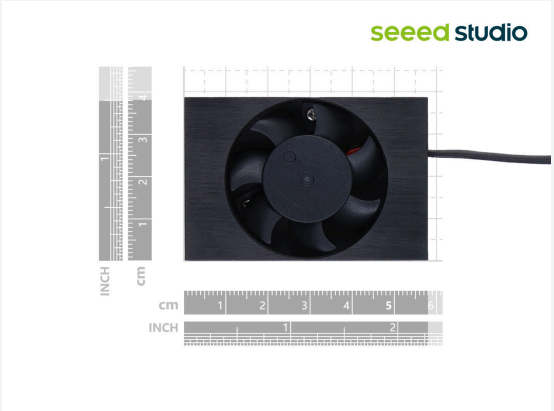

Hardware Overview

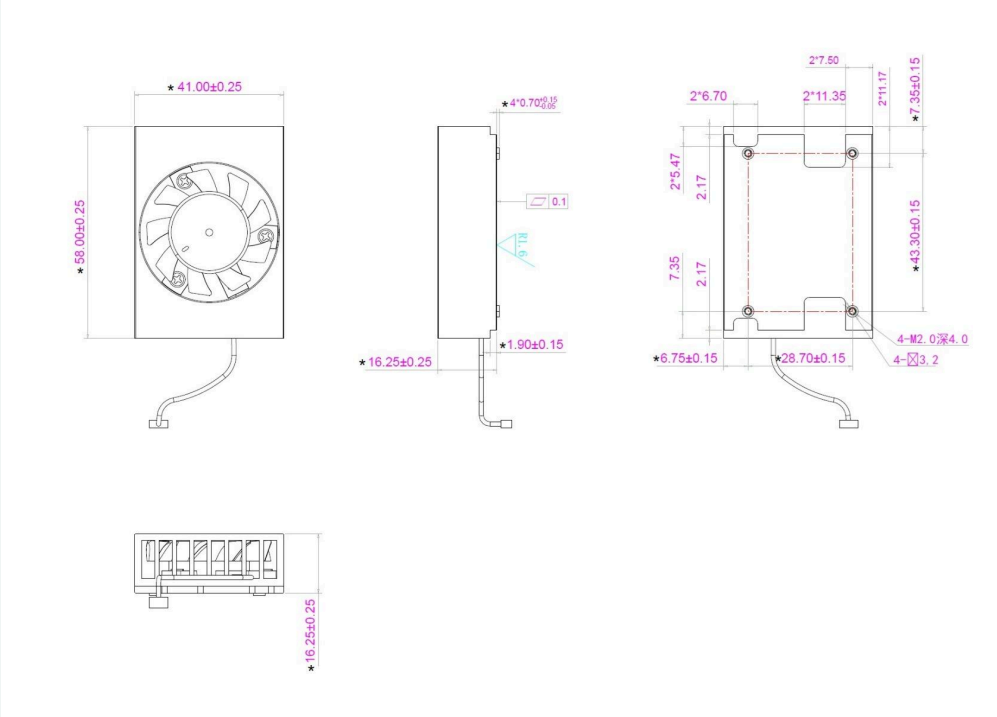

Applications

- **Cooling NVIDIA Jetson Orin™ NX/Orin™ Nano/Xavier NX**

Resource Links

- https://www.seeedstudio.com/Aluminum-Heatsink-with-Fan-for-Jetson-Orin-NX-Orin-Nano-Xavier-NX-Module-p-5633.html
- Fan Specifications

Seeed Technology Co.,Ltd.
9F, Building G3, International E City,
Zhongshanyuan Road, Nanshan, Shenzhen, China

Tel: +86 0755-80695676
Web: www.seeed.cc
Shop: www.seeedstudio.com