seeed studio

INDUSTRIAL PRODUCT DATASHEET

Wio-SX1262 LoRa Wireless Module (Tape Reel), SX1262 embedded, supports LoRa&LoRaWAN on EU868 & US915

The Wio-SX1262 is a LoRa wireless module based on the Semtech SX1262 chip, supporting LoRa & LoRaWAN frequency from 868 to 915 MHz.

SKU	UPDATED	PRICE
114993390	2026-11-12 02:59:28	$4.29(Excl. VAT)

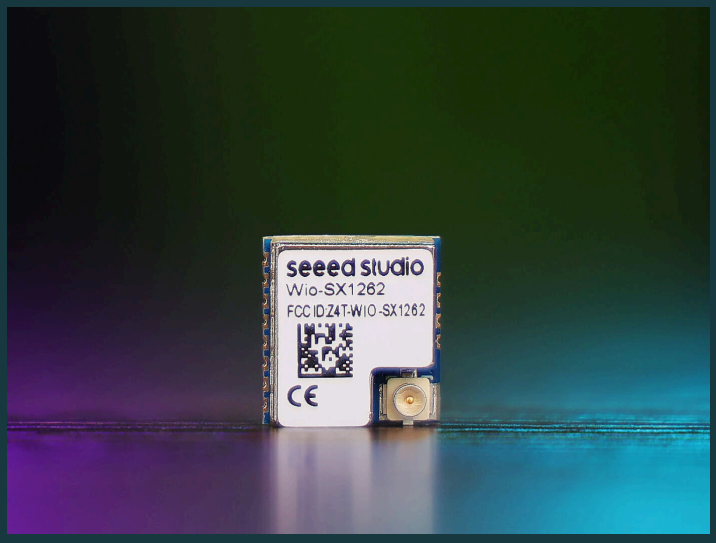

Overview

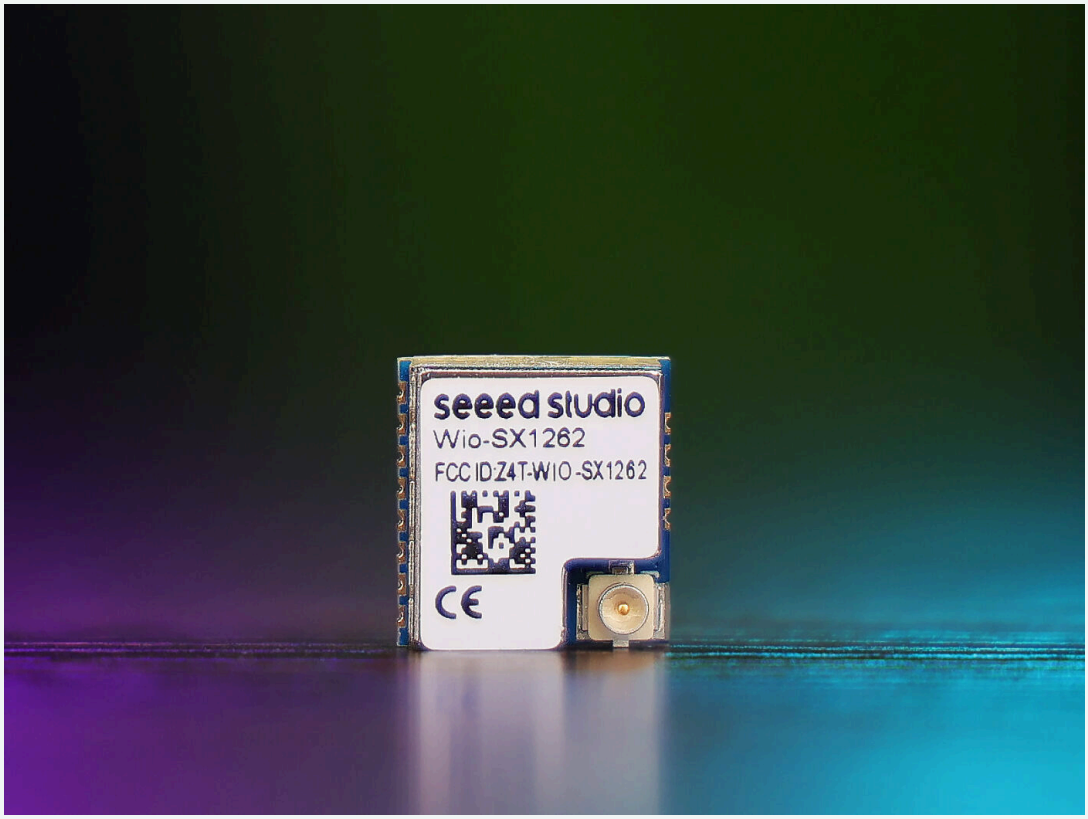

The Wio-SX1262 is a LoRa wireless module based on the Semtech SX1262 chip, supporting LoRa & LoRaWAN frequency from 868 to 915 MHz. Equipped with an onboard IPEX antenna connector and high-quality components like the TCXO, it ensures stable operation even under harsh conditions. Suitable for industrial, agricultural, smart home, and other long-range, low-power applications.

Key Features

01 **Go from Module Selection to a Working Project**

02 **See Modules, Resources, and Real Projects →**

03 **High Performance**

The transmit power up to 22dBm @868/930MHz; -136.73dBm sensitivity for SF12 with 125KHz BW.

04 **Wireless Connectivity**

SPI interface, supports 862~930MHz global LoRa&LoRaWAN frequency plan.

05 **Small Size**

6mm X 11mm * 2.95mm @12 pins SMT.

06 **Low Power Consumption**

1.62uA sleep current .

07 **Onboard RF Interface**

default IPEX antenna port.

08 **FCC ID, CE, RoHSCertified**

09 **If you already have an MCU, such as an nRF52840 or ESP32, and you just need to add LoRa functionality, you can choose the Wio-SX1262.**

10 **If you need a single MCU to complete your design, then the Wio-E5 is an excellent choice.**

11 **ODM & OEM**

12 **Seeed Fusion PCBA Services**

Product Gallery





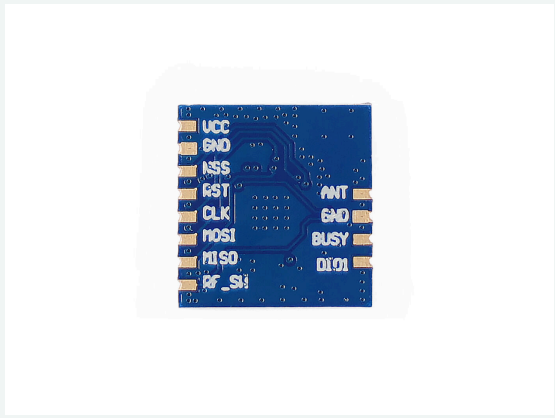

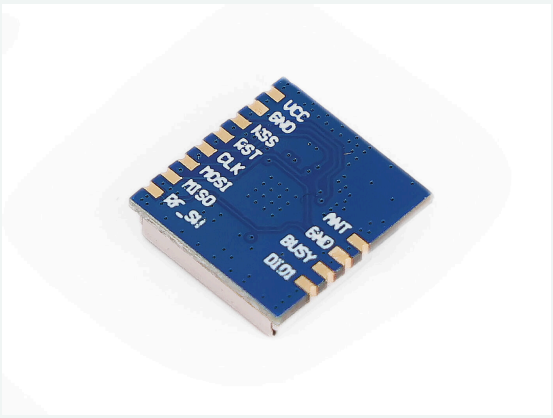



Hardware Overview

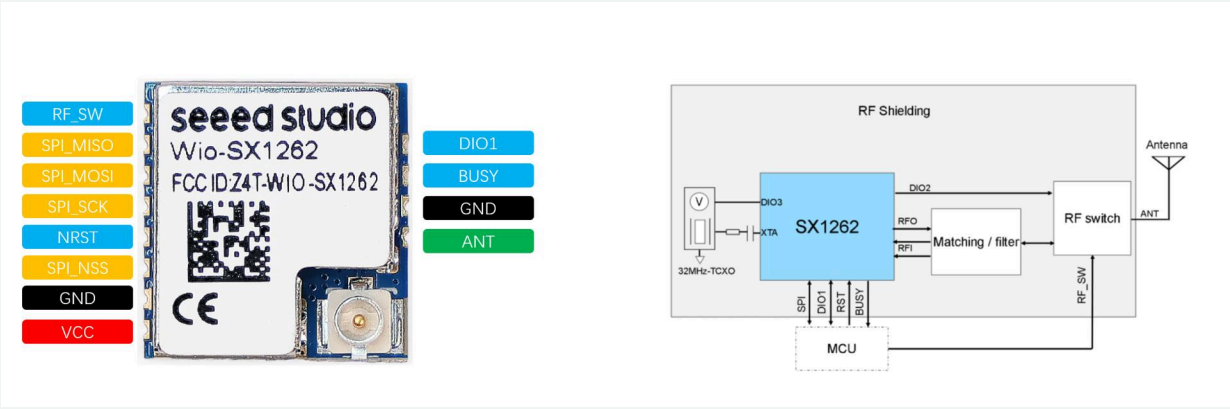

Applications

- The Wio-SX1262 and Wio-E5 can be used for the same applications, with the primary differences being the device control solutions and cost options. Thus, past cases involving the Wio-E5 can serve as useful references.
- Solar-Powered Outdoor Air Quality Monitor transmits data over LoRaWAN with the help of Seeed Fusion - Latest Open Tech From Seeed
- Low-Power Snow Depth Sensor Monitoring for IoT Smart City Based On Wio-E5 Applied in Norway - Latest Open Tech From Seeed
- Former Ph.D Researcher At OSU Developed Stream Runoff Monitoring Sensors Using Wio-E5 to Measure The Temperature, Quality and Flow - Latest Open Tech From Seeed
- Monitoring Indoor Air Pollutants – The Silent Issue for Smart City IoT using Seeed Wio-E5 and Fusion PCBA - Latest Open Tech From Seeed
- Voice Needed! Ready for a Wio-E5 & ESP32 Powered WiLoBlIno Device? - Latest Open Tech From Seeed

Resource Links

- https://www.seeedstudio.com/Wio-SX1262-Wireless-Module-p-5981.html
- Wio-SX1262 Module Datasheet
- Semtech SX1262 Chip Datasheet
- Wio-SX1262 Module Kicad Library
- Wio-SX1262 Module 3D file

Seeed Technology Co.,Ltd.
9F, Building G3, International E City,
Zhongshanyuan Road, Nanshan, Shenzhen, China

Tel: +86 0755-80695676
Web: www.seeed.cc
Shop: www.seeedstudio.com