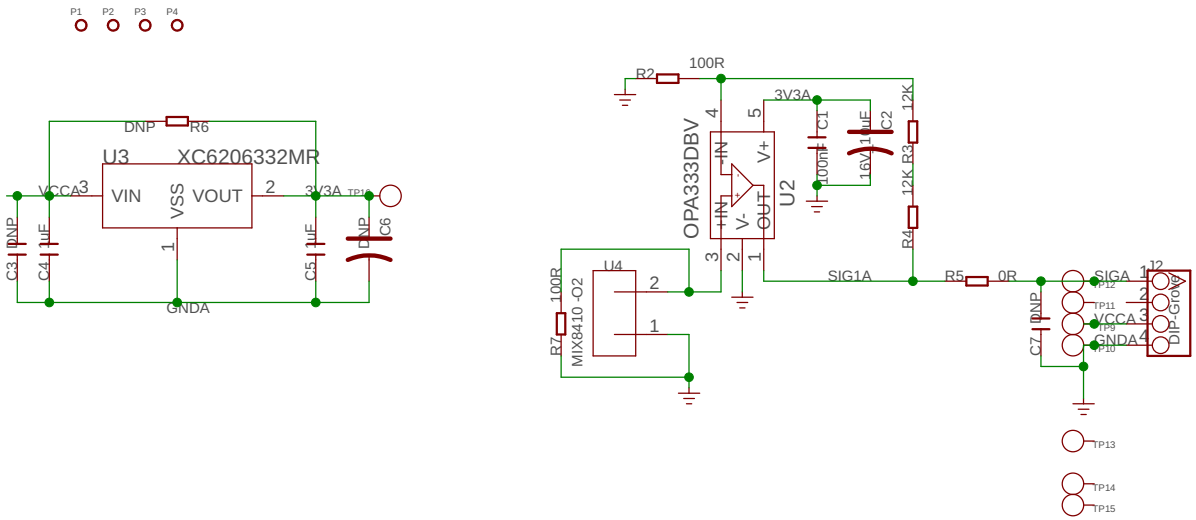

Seeed Studio

TITLE: Grove - Oxygen Sensor(MIX8410)_v1.0_200811

CC-BY-SA	Design:	Check:
	Date: 尚未保存!	Vision:	Sheet: 1/1