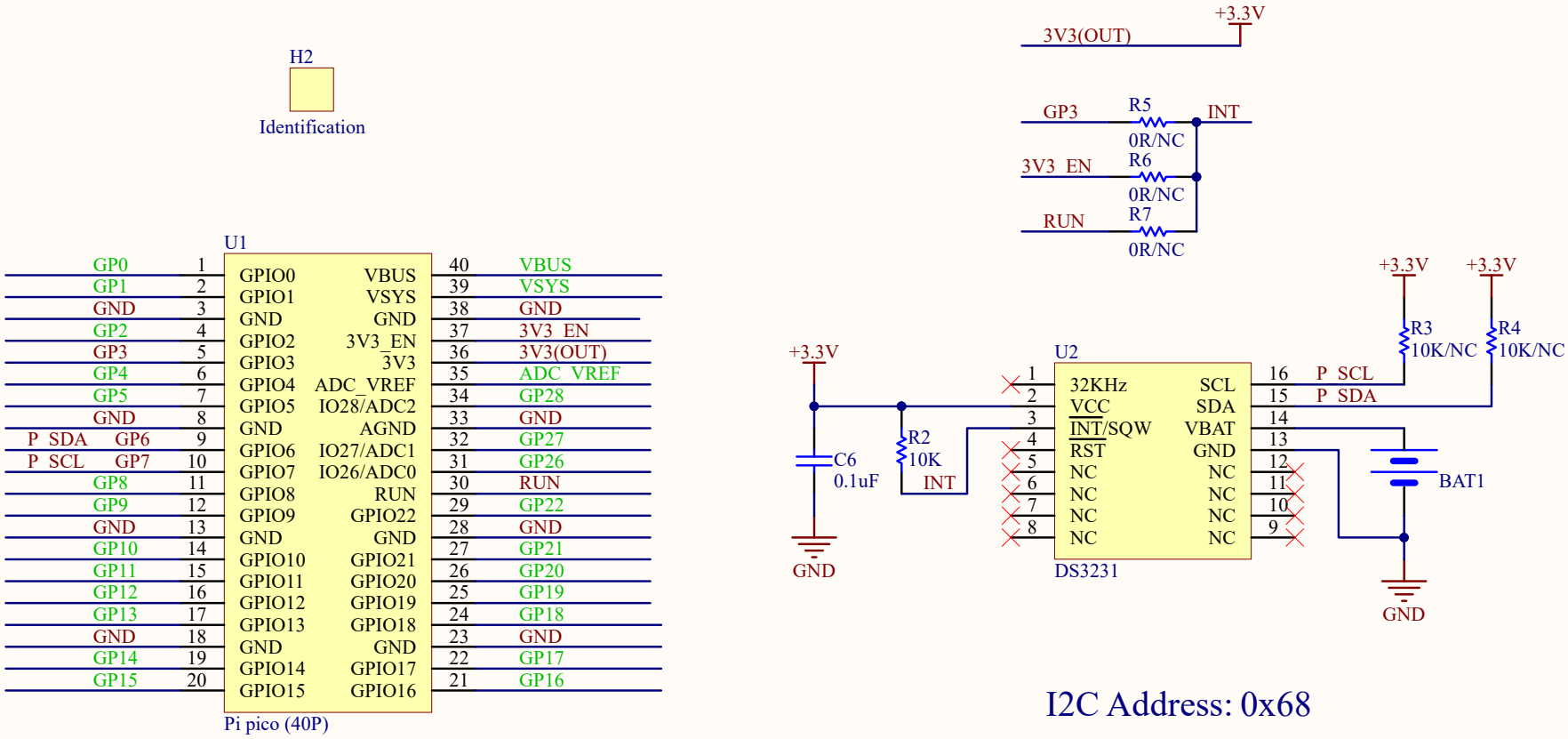
H2
Identification
U1
GP0 1 GPIO0
GP1 2 GPIO1
GND 3 GND
GP2 4 GPIO2
GP3 5 GPIO3
GP4 6 GPIO4
GP5 7 GPIO5
GND 8 GND
P_SDA GP6 9 GPIO6
P_SCL GP7 10 GPIO7
GP8 11 GPIO8
GP9 12 GPIO9
GND 13 GND
GP10 14 GPIO10
GP11 15 GPIO11
GP12 16 GPIO12
GP13 17 GPIO13
GND 18 GND
GP14 19 GPIO14
GP15 20 GPIO15
VBUS 40 VBUS
VSYS 39 VSYS
GND 38 GND
3V3_EN 37 3V3_EN
3V3 36 3V3(OUT)
ADC_VREF 35 ADC_VREF
IO28/ADC2 34 GP28
AGND 33 GND
IO27/ADC1 32 GP27
IO26/ADC0 31 GP26
RUN 30 RUN
GPIO22 29 GP22
GND 28 GND
GPIO21 27 GP21
GPIO20 26 GP20
GPIO19 25 GP19
GPIO18 24 GP18
GND 23 GND
GPIO17 22 GP17
GPIO16 21 GP16
Pi pico (40P)
3V3(OUT)
+3.3V
GP3
R5
0R/NC
INT
3V3_EN
R6
0R/NC
RUN
R7
0R/NC
+3.3V
+3.3V
R3
10K/NC
R4
10K/NC
U2
1 32KHz
2 VCC
3 INT/SQW
4 RST
5 NC
6 NC
7 NC
8 NC
SCL 16 P_SCL
SDA 15 P_SDA
VBAT 14
GND 13
NC 12
NC 11
NC 10
NC 9
DS3231
+3.3V
C6
0.1uF
GND
R2
10K
INT
BAT1
GND
I2C Address: 0x68
+3.3V
R8
0R/NC
R1
1K
L_PWR1
GND
Waveshare
Pico-RTC-DS3231

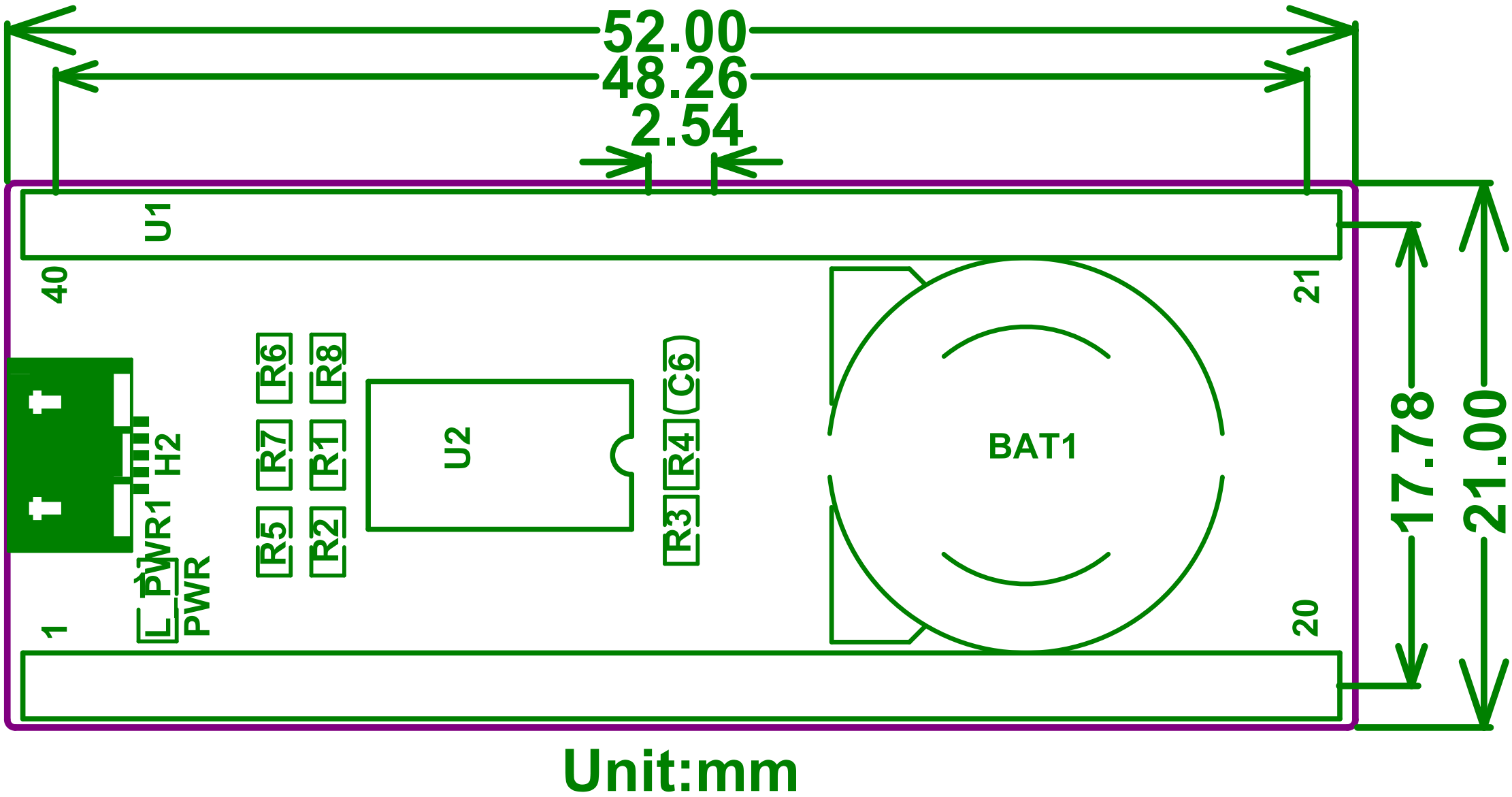
52.00
48.26
2.54
U1
40
21
1
20
H2
PWR1
PWR
R5
R6
R7
R8
R1
R2
U2
R3
R4
C6
BAT1
17.78
21.00
Unit:mm