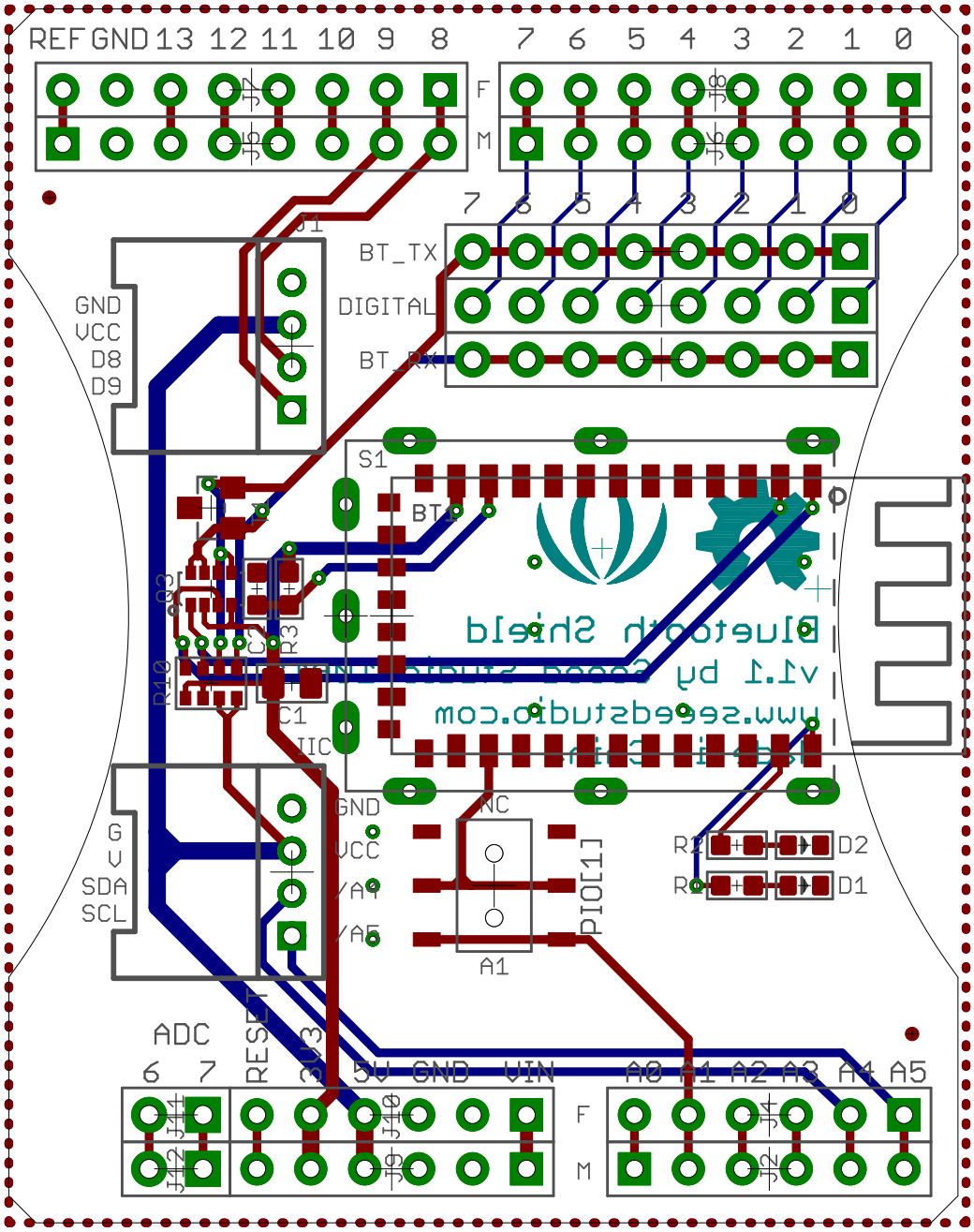

2017/5/20 17:37 f=3.00 D:\ZYwiki\Bluetooth-Shield\res\BlueTooth Shield.brd