COOLCOX®

产品承认书

SPECIFICATION FOR APPROVAL

客户名称(Customer): 矽递

品　　名(Part Name): DC Brushless Fan

客户型号(Customer Part No.):4010 双滚珠支架风扇

奇凌型号(CoolCox Part No.): CC4010H05D

日　　期(Issue Date): 2025-8-8

客户确认签名 / CUSTOMER'S AUTHORIZED SIGNATURE	
签名/SIGNATURE：	日期/DATE：

东莞市奇凌电子科技有限公司

CoolCox Limited

电话/TEL:86-138-0238-2470

地址：广东省东莞市望牛墩镇望东万盛路 1 号

Add.: No. 1,WanSheng Road,Wangdong,Wangniudun Town,Dongguan,Guangdong,523199,China

网站/WEB:WWW.COOLCOX.COM　　邮箱/E-MAIL: sales2@coolcox.com

核准(APPROVED BY)	审查(CHECKED BY)	制作(PREPARED BY)
John Huang	Ping Chen	LiYi

修订记录 (Revision History)

版本号 Revision No.	内容描述 Description	客户型号 Customer Part No.	奇凌型号 CoolCox Part No.	日期 Date
A0	初版发行		CC4010H05D	2025-8-8

1.0 一般规格(General Specification)

项目 / ITEM		规格 / SPECIFICATION		
1-1	型号(Part No.)	CC4010H05D		
1-2	外形尺寸(Dimension)	Ø37*10MM		
1-3	额定电压(Rated Voltage)	5.0VDC		
1-4	启动电压(Starting Voltage)	4.0VDC		
1-5	运行电压(Operation Voltage)	4.0~5.5VDC		a.额定电压/Rated Voltage
1-6	转速(Speed)	9000R.P.M	±10%	b.温度(Temp.): 25℃
1-7	额定电流(Rated Current)	0.25±0.03A(标签 0.30A)		c.湿度(Humidity): 65%
1-8	锁机电流 (Locked rotor current)	0.40±0.04A		d.Measured after 5 Mins
1-9	额定功率(Rated Power)	1.25W		
1-10	风量(Air Flow) (At zero static pressure)	6.2CFM (Max7.21CFM)		a.测试设备(Test Equipment) 风洞测试仪(Wind Tunnel)
		0.18m³/min (Max0.21m³/min)		
1-11	静压(Air Static Pressure) (At zero airflow)	6.8mm-H_2O(Max8.04mm-H_2O)		b.测试标准(Test Standard): AMCA210
		0.27Inch-H_2O (Max0.32Inch-H_2O)		
1-12	噪音(Acoustical Noise)	32.2DB-A(Max34.6DB-A)		a.无响室 Anechoic Chamber b.距离(Distance):1M c.背景噪音: <18dB Background Noise: <18dB
1-13	寿命预估(Life Expectancy)	70,000 Hours		a. 温度(Temp.):40℃ b. 湿度(Humidity): 65%
1-14	马达极数(No. of Pole)	4 极/Poles		
1-15	旋转方向(Rotating Direction)	逆时针/Counter-Clockwise (从扇叶面看 / Viewed from front of fan impeller)		
1-16	其他功能(Other functions)	转速输出 (FG Signal/Tach out)		☑
		锁定报警 (RD:Rotation Detector)		☐
		PWM 功能 (PWM Control)		☑
		自动重启 (Auto-start)		☑
		软启动 (Soft-start)		☐
		防护等级 (IP Rating Level)		☐

2.0 电气规格(Electrical Specification)

2-1	锁机保护 Locked Protection	☐	无 / Unavailable
		☑	当锁住扇叶后风扇将完全关闭，取消锁定后风扇重启 The fan will shut down when rotor locked and fixed
2-2	极性保护 Polarity Protection	☐	无 / Unavailable
		☑	Vcc 与 GND 反接时，不导通 Open circuit if reverse connection for positive and negative leads
		☐	Vcc 与 GND 反接时，5 秒内不烧毁 Be capable of withstanding for 5 seconds if reverse connection for positive and negative leads
2-3	绝缘阻抗 Insulation Resistance	10MΩ以上/外框与正级间测量，500VDC/min 10MΩ or more between frame and (+) terminal at 500VDC/min	
2-4	绝缘耐压 Dielectric Strength	5mA(最大) /外框与正级间测量，500VAC/min 5mA Max./Measured between frame and (+) terminal at 500VAC/min ,50/60 Hz	
2-5	绝缘等级/Insulation Class	A 级 (Class A)	

3.0 主要材料&零件规格 (Main Materials & Parts Specification)

3-1	轴承(Bearing)	☐含油(Sleeve)		☐液压(Hydraulic)	
		☑双滚珠(2-Ball)		☐流体动压(FDB)	
3-2	外框材质(Frame)	PBT UL94V-0			
3-3	扇叶材质(Impeller)	PBT UL94V-0			
3-4	绝缘架(Bobbin)	PBT UL94V-0			
3-5	线路板(PCB)	☑单层(Single layer)		☐双层(Double layer)	
3-6	漆包线(Varnished wire)	2UEW			
3-7	矽钢片 (Silicon steel sheet)	H23			
3-8	导线(Lead wire)	☑Black (-)	☑Yellow(FG)	☑Red(+)	☑ Blue(PWM)
		UL1061 AWG 28		4 线,L=110±5mm	
3-9	连接器(Connector)	1.25-4P 白色胶壳			
3-10	套管(Tube)	70mm 黑色热缩套管			
3-11	环保要求(Enviromental Requirement)	☑ RoHS		☐无卤(Halogen-free)	

4.0 环境测试(Environmental Specification)

4-1	运转温度&湿度范围 Operation Temperature & Humidity	温度/Temperature : -10 ℃ ~70℃
		湿度/Humidity :35%~ 85% RH
4-2	储存温度& 湿度范围 Storage Temp. & Humidity	温度/Temperature : -40 ℃ ~70℃
		湿度/Humidity :35%~ 85% RH
4-3	热冲击(Thermal Shock)	电气规格依据 MIL-STD 202F Method 107D In accordance with MIL-STD 202F Method 107D
4-4	包装耐震动实验 Packing Vibration Test	包装后，X Y Z 三个方向加 1.1G 做 30 分钟震动测试，没有严重损坏 (1.1G load from orientation X Y Z, no serious damaged after vibration test for 30min)
4-5	包装耐冲击实验 Packing Shock Proof Test	包装后，60 厘米高，1 棱角 3 边 6 面自由落下，无严重损坏 (After packaging, 1 edge,3 sides,6 sides fall freely from height 60cm, without serious damage)

5.0 P-Q 特性曲线测试(P-Q Performance Curve Test)

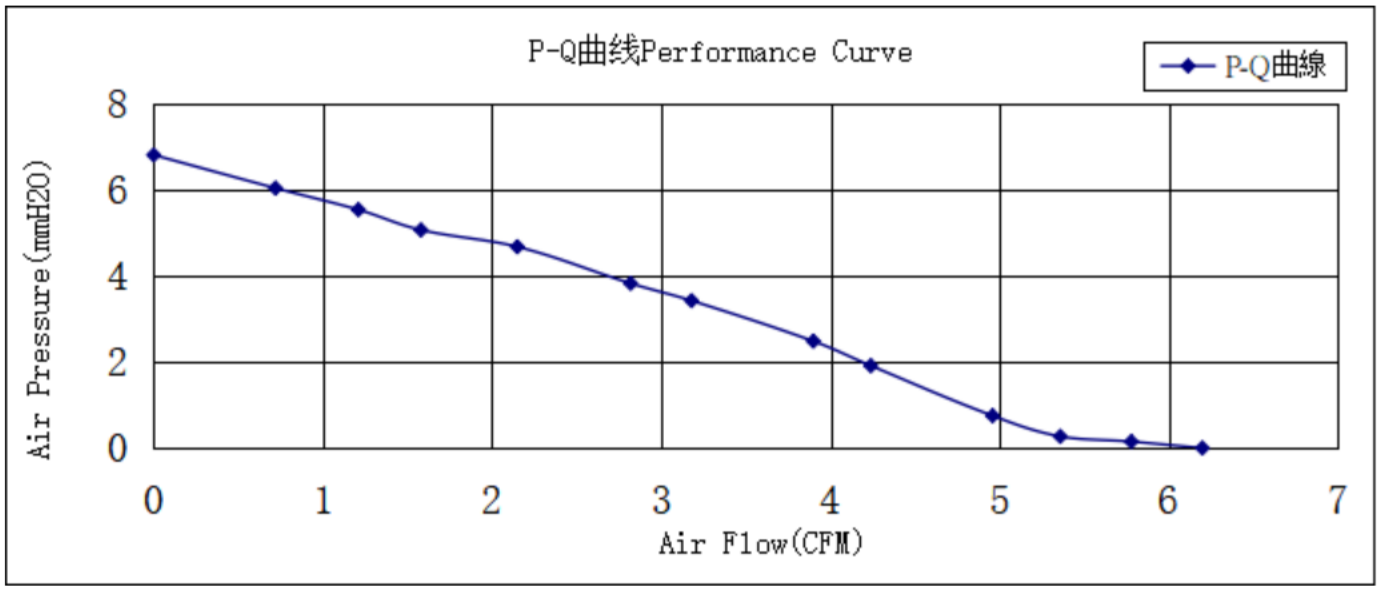

测试条件(Test Condition):
输入电压(Input Voltage) -----运行电压(Operation Voltage)
温度(Temperature)----- 室温(Room Temperature)
湿度(Humidity)----65%RH

6.0 噪音测试条件 (Acoustical noise measuring condition)

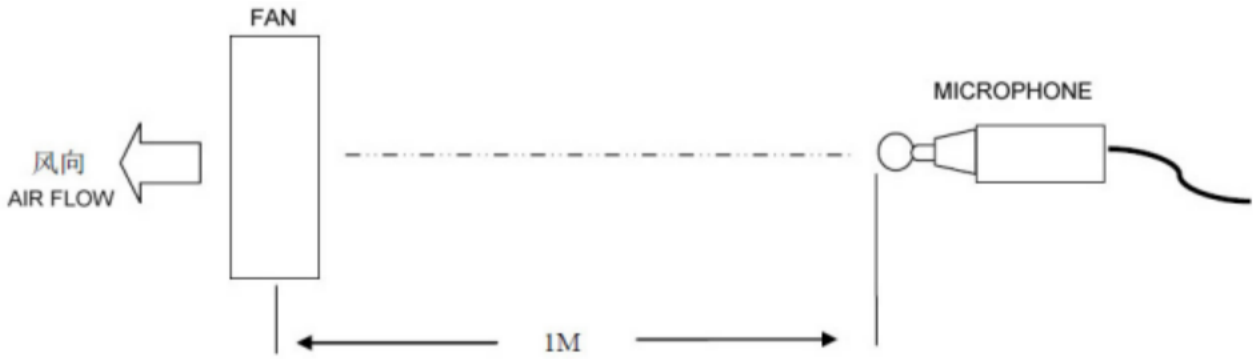

测量系统/Measurement Systems
1.无响室 (Anechoic chamber)
2.声学测量传声器和放大器 (Sound level meter with microphone)
3.测试距离风扇进气口 1 米(Distance 1M from the fan intake)
4.背景噪音(Background noise) <18db-A

7.0 尺寸图 (Dimension Drawing)

版本 Version	描述 Description
S-00	/

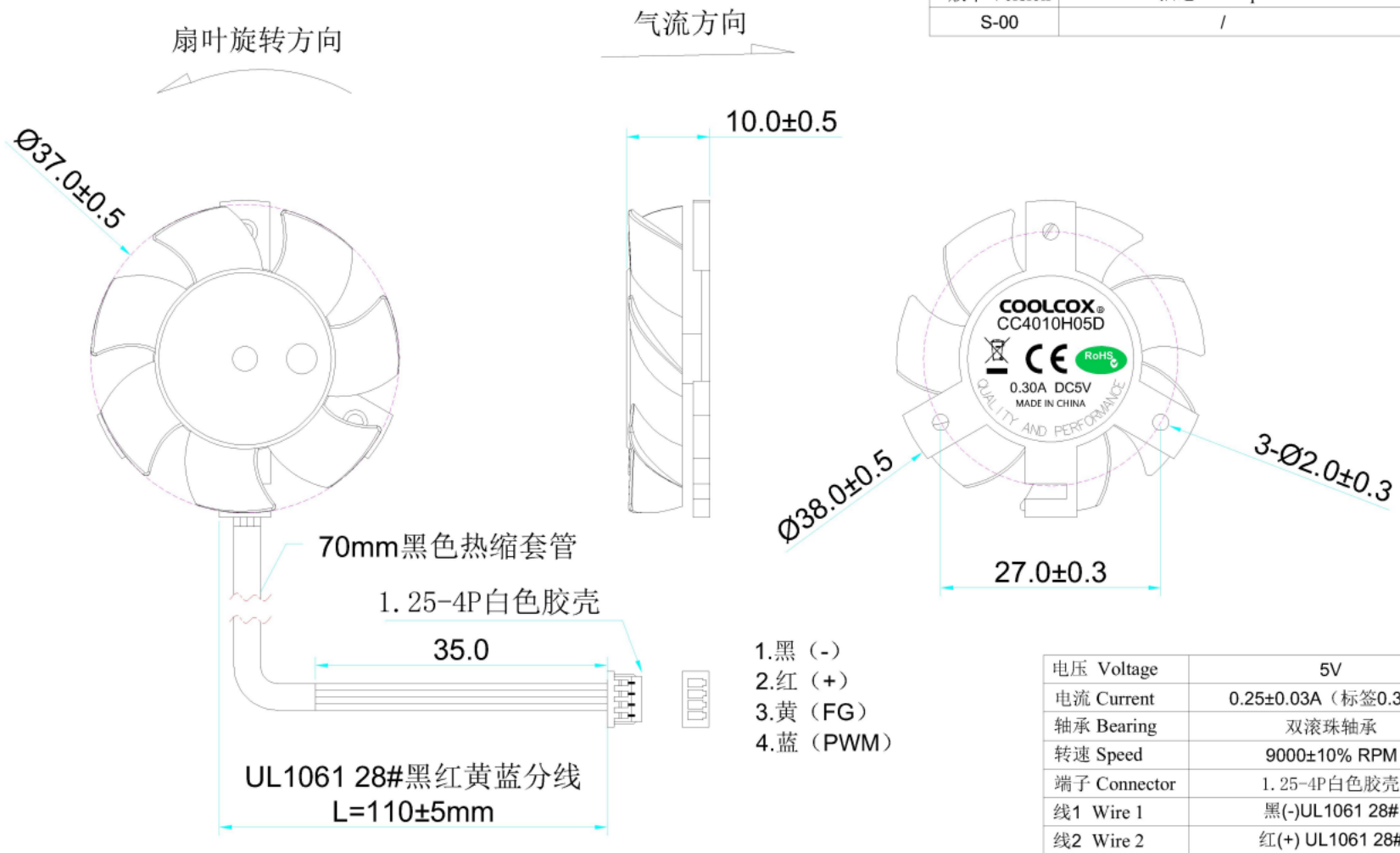

电压 Voltage	5V
电流 Current	0.25±0.03A（标签0.30A）
轴承 Bearing	双滚珠轴承
转速 Speed	9000±10% RPM
端子 Connector	1.25-4P白色胶壳
线1 Wire 1	黑(-)UL1061 28#
线2 Wire 2	红(+) UL1061 28#
线3 Wire 3	黄(FG)UL1061 28#
线4 Wire 4	蓝(PWM) UL1061 28#

东莞市奇凌电子科技有限公司 COOLCOX LIMITED	材料 Material	颜色 Color	单位 Unit	比例 Scale	名称 Name	图号 Drawing No.
	/	/	mm	/	4010支架风扇	/
公差 Tolerance unless noted: 0.0~5.0 ±0.2; 5.0~20.0 ±0.3; 20.0~50.0 ±0.5; 50.0~100.0 ±0.9; R=0.5; Angle ±3°	批准 Approve	核对 Check	绘图 Draw	日期 Date	编号 No.	供应商 Vendor
	John	CP	Li	2025.8.8	CC4010H05D	/

8.0 测速功能 (Frequency Generator signal)

8-1: 输出电路为集电极开路模式 (Output method-open collector metheod):

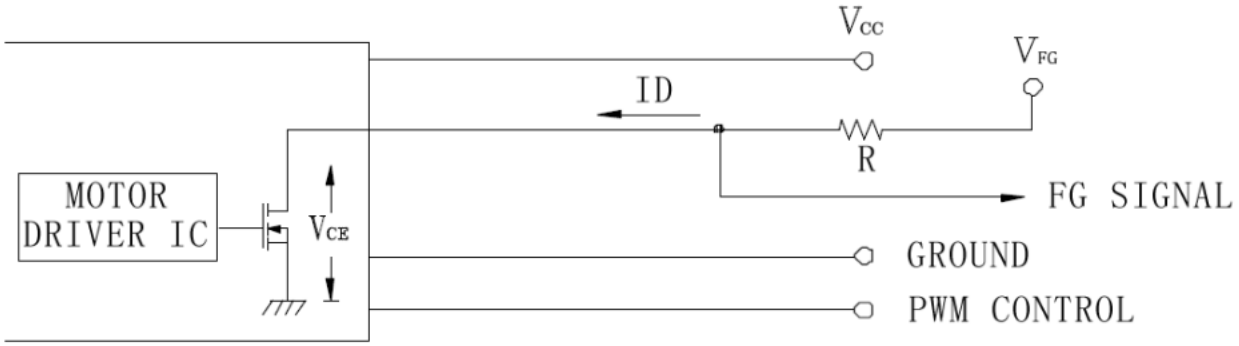

注意(Caution):

FG 信号线不能接触 “+” 和 “–” 引线

The FG signal lead wire can’t touch lead wire "+" and lead wire "-"

8-2: 规格(Specification):

V_{FG}=5.5V Type (Vcc Max.)

I_C = 5mA Max. $V_{ce(sat)}$= 0.5V Max R ≧ V_{FG}/I_C

8-3: FG波形示意图(Frequency Generator Waveform):

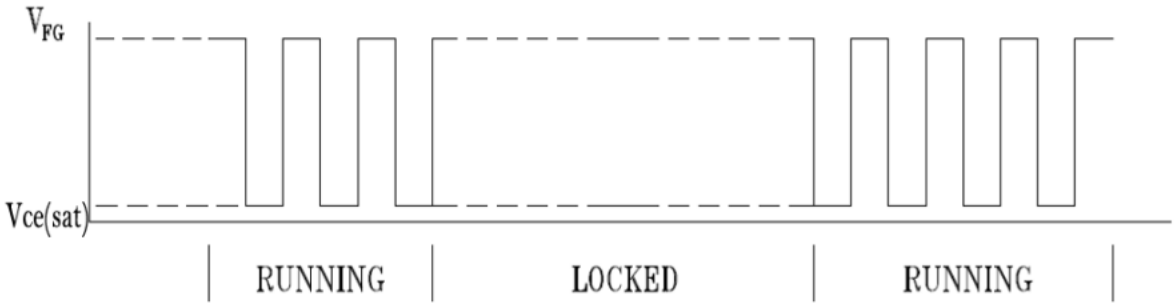

风扇 4 极运行(Fan running for 4 poles)

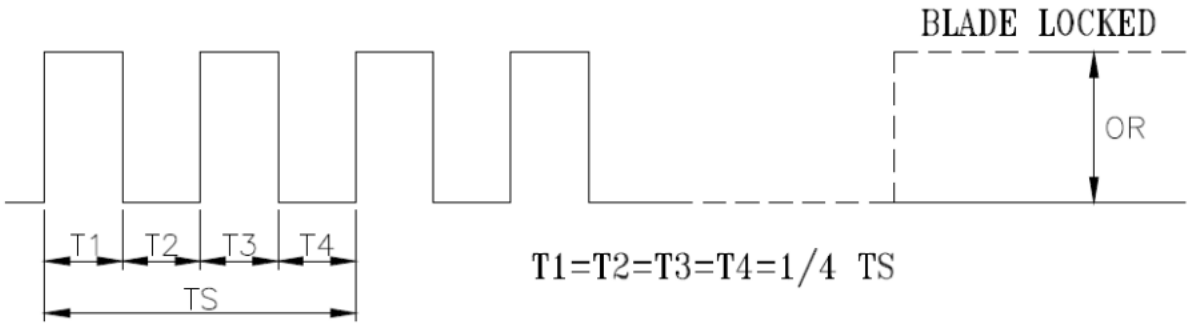

N=R.P.M

TS=60/N(SEC)

9.0 PWM 功能 (PWM Control Function)

9-1 PWM 特性(PWM Characteristics)

高平(High Level): <5.0VDC Max.
>2.5VDC Min.

低平(Low Level): <0.8VDC Max.

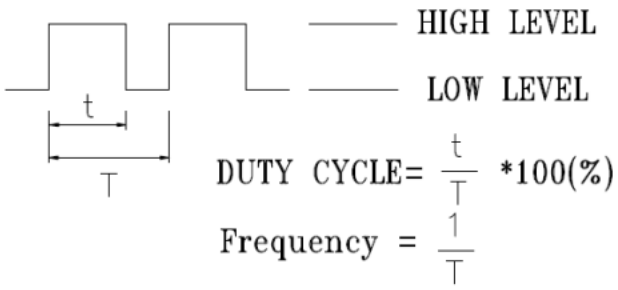

- 控制信号的频率范围为 0.1KHZ~50KHZ
  The frequency for controlling signal of the fan should be able to accept a 0.1KHZ~50KHZ

- 推荐使用 PWM 频率 25KHz
  The preferred operation frequency of PWM signal is 25KHz

- 在 100%占空比时，转子将以最大速度旋转
  At 100% duty cycle,the rotor will spin at maximum speed

- 在 0%占空比时，转子将停止旋转
  At 0% duty cycle, the rotor will stop to spin

- 当 PWM 控制线失效时，转子将以最大速度旋转
  When the PWM control lead wire is disconnected, the rotor will spin at maximum speed

- 在控制信号导线断开的情况下，风扇可能运行不稳定
  With control signal lead disconnected,the fan maybe run at unstable status

9-2 PWM 测试结果(PWM Test Results)

CC4010H05D　9000RPM PWM TEST RECORD

DUTY CYCLE	SPEED(RPM)	RANGE(RPM)	CURRENT(mA)
0%	0	0	5±5
10%	650	±500	13±10
30%	2950	±500	36±10
50%	5000	±500	75±10
70%	6750	±900	128±20
80%	7600	±900	165±20
100%	9000	±900	250±30

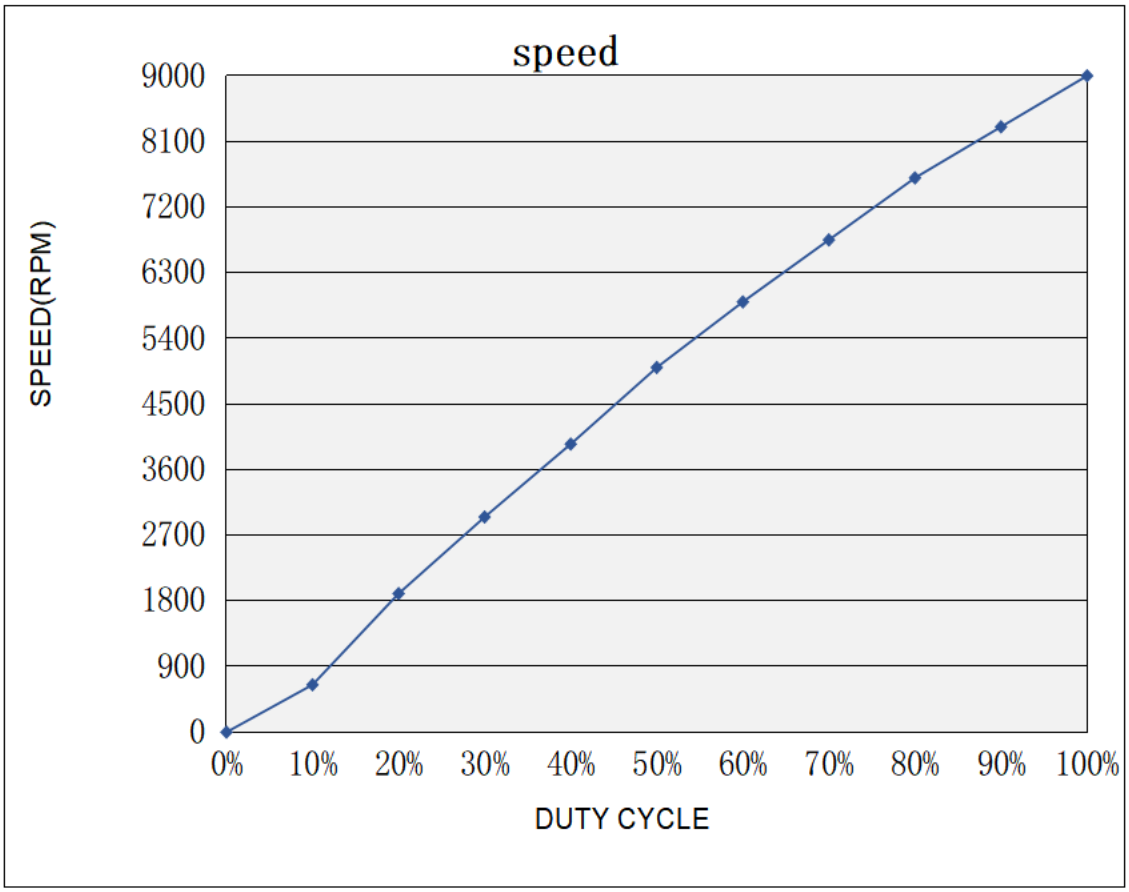

当占空比为 0%时，风扇将停止启动运行，最小启动占空比 10% 。
When the duty cycle is 0%, the fan will be able to start from a dead stop.
Min. started duty cycle: 10%

10.0 风扇安装说明 (Fan Installation Instruction)

1. 如果使用螺栓螺母紧固件，固定面的平整度应保持在 0.1mm 以下
In case of using bolt-nut fasteners, the flatness of chassis surface should be kept below 0.1mm

2. 如果使用螺栓螺母紧固件，机型设计为通过紧固在风入口或出口法兰上安装（如图（a）所示）；或如果螺栓穿过框两边法兰安装（如图（b）所示）；或包柱框安装（如图（c）所示）；施加在螺母上的扭力不得超过：法兰框：4.5 kgf-cm[如图（d）]；包柱框：7.5kgs-cm[如图（e）]
In case of using bolt-nut fasteners,the model was designed to be installed by fastening at either inlet or outlet flange as figure(a) ; In case of the bolt passing through both flanges as figure(b) ;or rib type frame as figure (c) , the torque to be applied to the nut must not exceed:
Flange type frame:4.5 kgf-cm [figure(d)] ; Rib type frame:7.5kgs-cm [figure(e)]

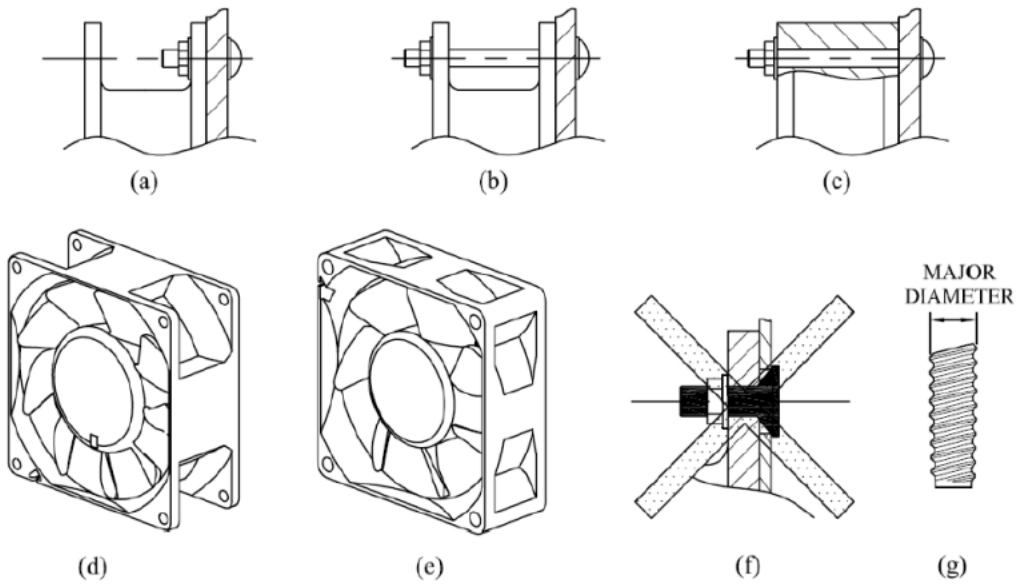

3. 如果是沉头紧固件，锁时沉头部分不应干扰框，否则会有造成框断裂风险[图(f)]， 建议优先使用平头紧固件。
The countersunk part of fastener should not interferer with the frame,otherwise, there's breakage risk[figure(f)],advise to give priority to flat head fastener.

4. 如果使用自攻螺丝，建议考虑使用下图所示的螺钉尺寸，每个安装孔只能拧紧一次，否则可能会出现滑牙，另外施加在自攻螺钉上的扭矩不得超过下表中所述的值。
If using self-tapping screws,recommend to use the screw sizes as shown in below table,each mounting hole should be tightened one time,otherwise,slippage may occur, besides,the torque to be applied to the self-tapping screw must not exceed the value stated in below table.

螺丝孔径(mm) Mounting hole dia.	螺丝规格 screw spec.	螺牙尺寸(Major dia.) [fig.(g)]		最大扭力(Max. Torque(kgf-cm))	
		最大(Max.)	最小(Min.)	法兰框(Flange type)	包柱框(Rib type)
Φ3.5	M4*1.41	4.0	3.85	4.5	7.5
Φ4.3	M4.8*1.59	4.8	4.65	5.5	7.5
Φ4.5	M5.0*1.59	5.0	4.85	5.5	7.5

※ 如果发现滑牙，建议使用比推荐的扭力值略低的扭力
A lower torque than the recommended value should be used if slippage is observed

11.0 使用注意事项 (Application Notice)

1. 使用时请勿超出本规格所规定之极限，否则我们不保证此产品质量。
We will not guarantee the performance of the products if the application condition falls outside the parameters set forth in the specification.

2. 如果承认该规格书前有异议，请务必事先提出需求。
A written request should be submitted to us prior to approval if deviation from this specification is required.

3. 拿取风扇时请小心。当对叶轮施加压力，用提导线方式拿取风扇，或者风扇硬掉到生产地板上，都可能会造成损坏。
Please exercise caution when handling fans. Damage may be caused when pressure is applied to the impeller, if the fans are handled by the lead wires, or if the fan was hard-dropped to the production floor.

4. 除了一些特殊设计外，本产品不保证因粉尘、水滴、小虫进入，而影响寿命与不良品产生。
Except some special designs, there is no guarantee that the products will be free from any such safety problems or failures as caused by the introduction of powder, droplets of water or encroachment of insect into the hub.

5. 在将风扇连接到电源之前，检查正极（+）和负极（-）是否连接正确，如果接反极性，可能 会损坏风扇。
It is very important to set the correct polarity before connecting the fan to power source.Damage may be caused to the fans if Positive (+) and Negative (-) reverse.

6. 请确保风扇在规定的温湿度储存环境中，如果风扇存储 6 个月以上，我们建议客户测试风扇功能后再使用。
Please ensure the fans are stored according to the storage temperatures specified. Do not store in a high humidity environment. If the fans are stored for more than 6 months, we recommend functional testing before using.

7. 并非所有风扇都具有锁定转子保护功能。如果不具有此功能的风扇的叶轮旋转时受到阻挠， 风扇的性能会出现故障。
Not all fans are provided with the Lock Rotor Protection feature. If you impair the rotation of the impeller for the fans that do not have the function,the performance of the fans will lead to failure.

8. 不适当的安装可能产生刺耳的共振，振动和噪音，安装时，请不要在安装点用力过度或用力不均以免造成振动或噪音。
Please be cautious when mounting the fan. Incorrect mounting of fans may cause excess resonance, vibration and subsequent noise.

9. 建议安装风扇保护罩，以免对人员造成意外伤害。
Please consider to install fan guards to avoid personal accidental injuries.