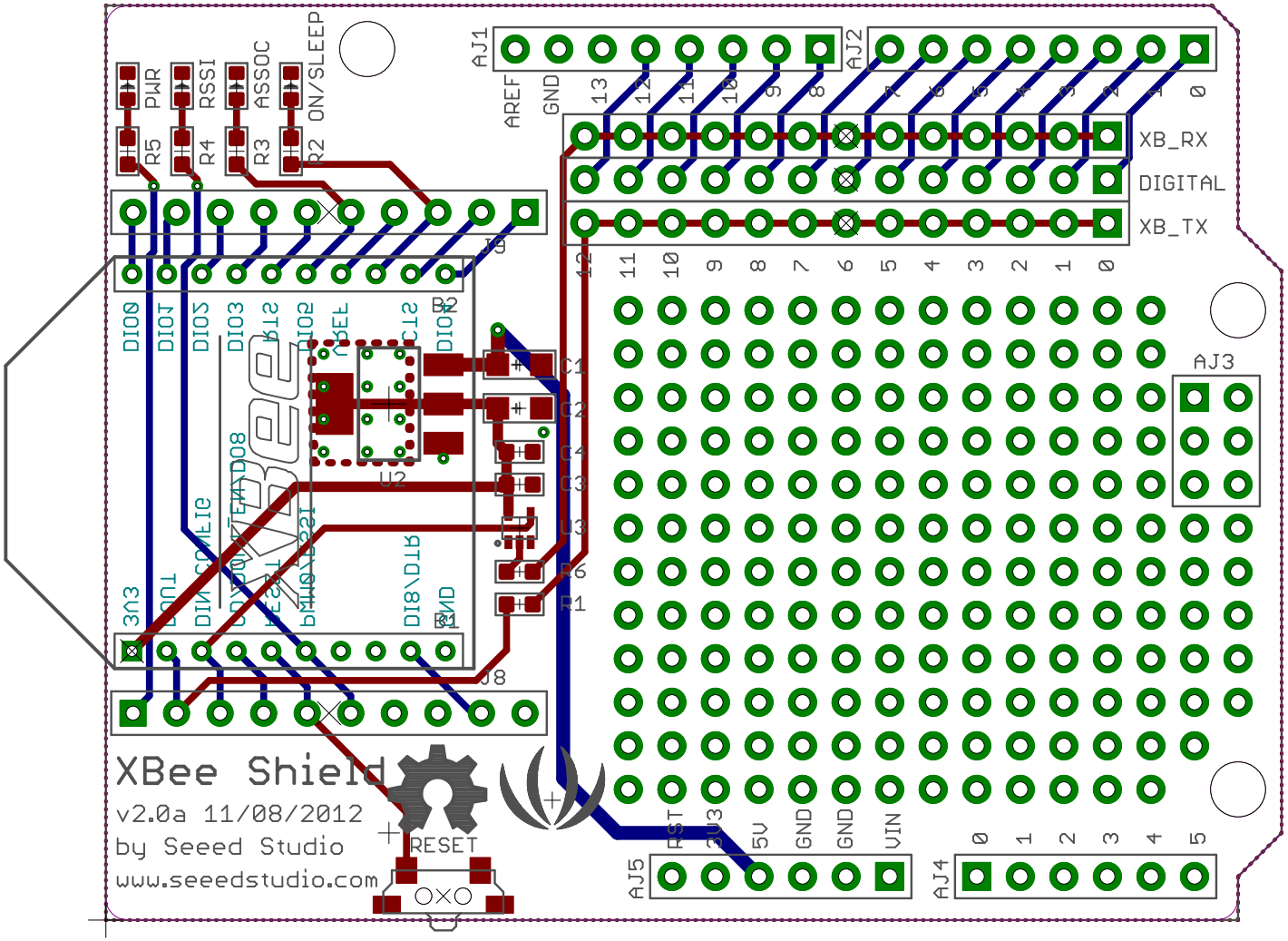
XBee Shield
v2.0a 11/08/2012
by Seeed Studio
www.seeedstudio.com
RESET
PWR
RSSI
ASSOC
ON/SLEEP
R5
R4
R3
R2
AJ1
AREF
GND
13
12
11
10
9
8
AJ2
7
6
5
4
3
2
1
0
XB_RX
DIGITAL
XB_TX
AJ3
AJ4
AJ5
RST
3V3
5V
GND
GND
VIN
J9
J8
U2
U3
C1
C2
C4
C3
R6
R1
DIO0
DIO1
DIO3
DIO2
DIO4
3V3
DIN/CONFIG
DIO8/DTR
GND