P3737-A05

Jetson Orin Developer Kit Carrier Board

TABLE OF CONTENTS

Page	Description
1	Table of Contents
2	Reserved
3	CVM connector 1 of 3
4	CVM connector 2 of 3
5	CVM connector 3 of 3
6	Button MCU
7	Debug MCU
8	Reserved
9	JTAG Connector
10	EEPROM
11	PCIe x16 Connector
12	10Gb ETH PHY AQR113C
13	10Gb RJ45 Connector
14	Camera connector
15	M.2 Key E
16	M.2 Key M
17	40 Pin Header
18	Codec and HD Audio header
19	XFI Mux
20	USB3.1 HUB
21	USB3.1 TypeA x2 (A)
22	USB3.1 TypeA x2 (B)
23	DP Connector
24	microSD Socket
25	I2C Levelshifter
26	Buttons & Fan
27	USB Debug Connector
28	USB PD Controller
29	USB PD Path
30	Reserved
31	USB type-C Connector
32	DC JACK
33	System Power 0V7 1V0 2V0
34	System Power 1V8 & 3V3
35	System Power 12V
36	System Power 5V
37	Mechanical
38	Reserved

seeed The IoT Hardware Enabler		https://www.seeedstudio.com	
		Title: P3737_A05	
Size: Custom	Document Number: 0002_Reserved		Rev: v1.0
Draw By: Seeed	Date: Friday, June 05, 2026		Sheet: 2 of 38

CVM CONNECTOR 1/3

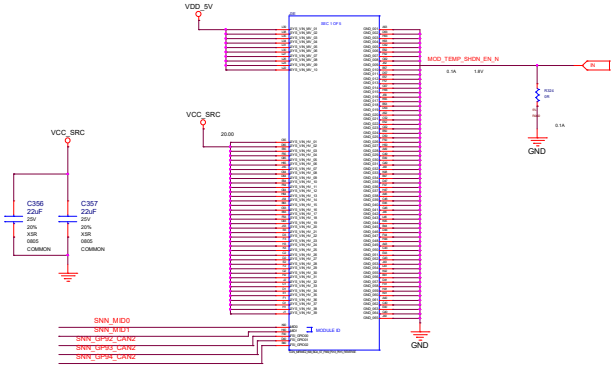

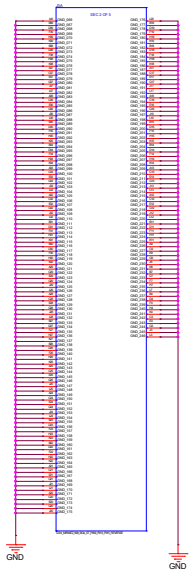

seeed The IoT Hardware Enabler	https://www.seeedstudio.com	
	Title: P3737_A05	
Size: Custom	Document Number: 0003_CVM connector 1 of 3	Rev: v1.0
Draw By: Seeed	Date: Friday, June 05, 2026	Sheet: 3 of 38

CVM CONNECTOR 2/3

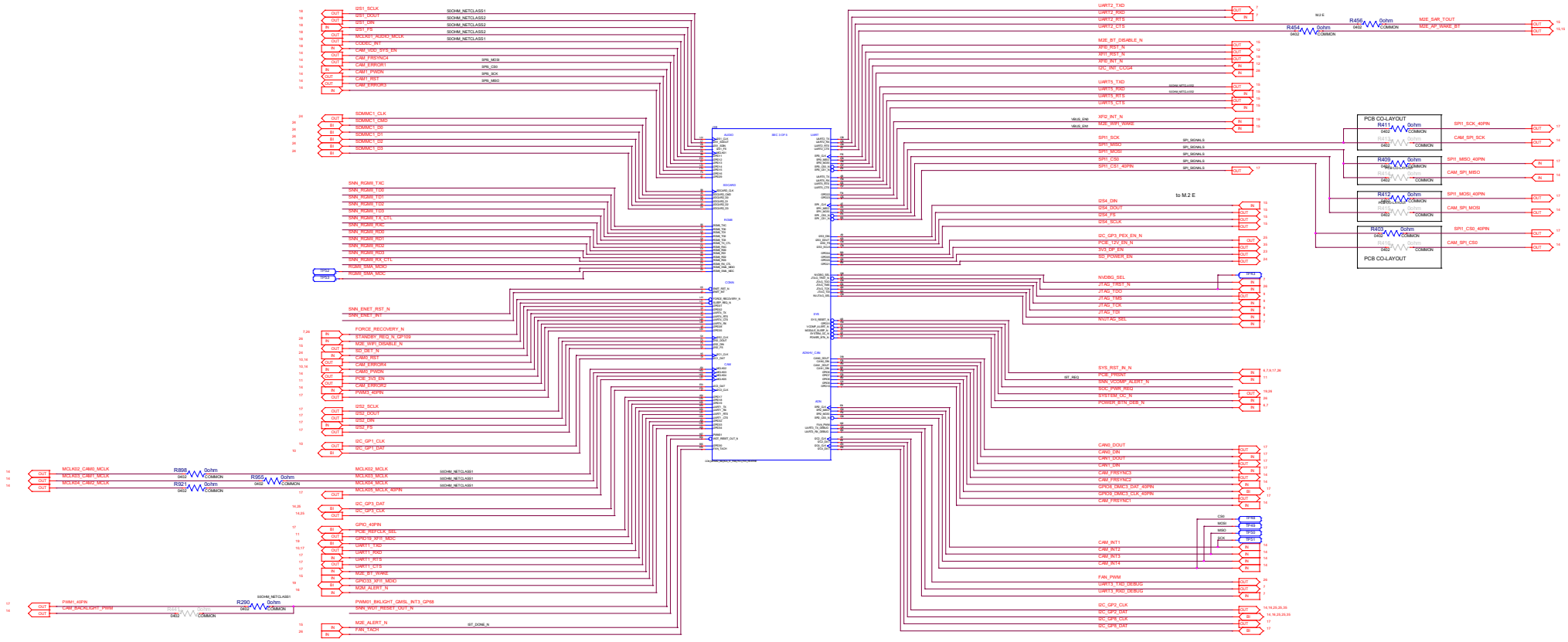

seeed The IoT Hardware Enabler

https://www.seeedstudio.com

Size: Custom	Document Number: 0004_CVM connector 2 of 3	Rev: v1.0
Draw By: Seeed	Date: Friday, June 05, 2026	Sheet: 4 of 38

CVM CONNECTOR 3/3

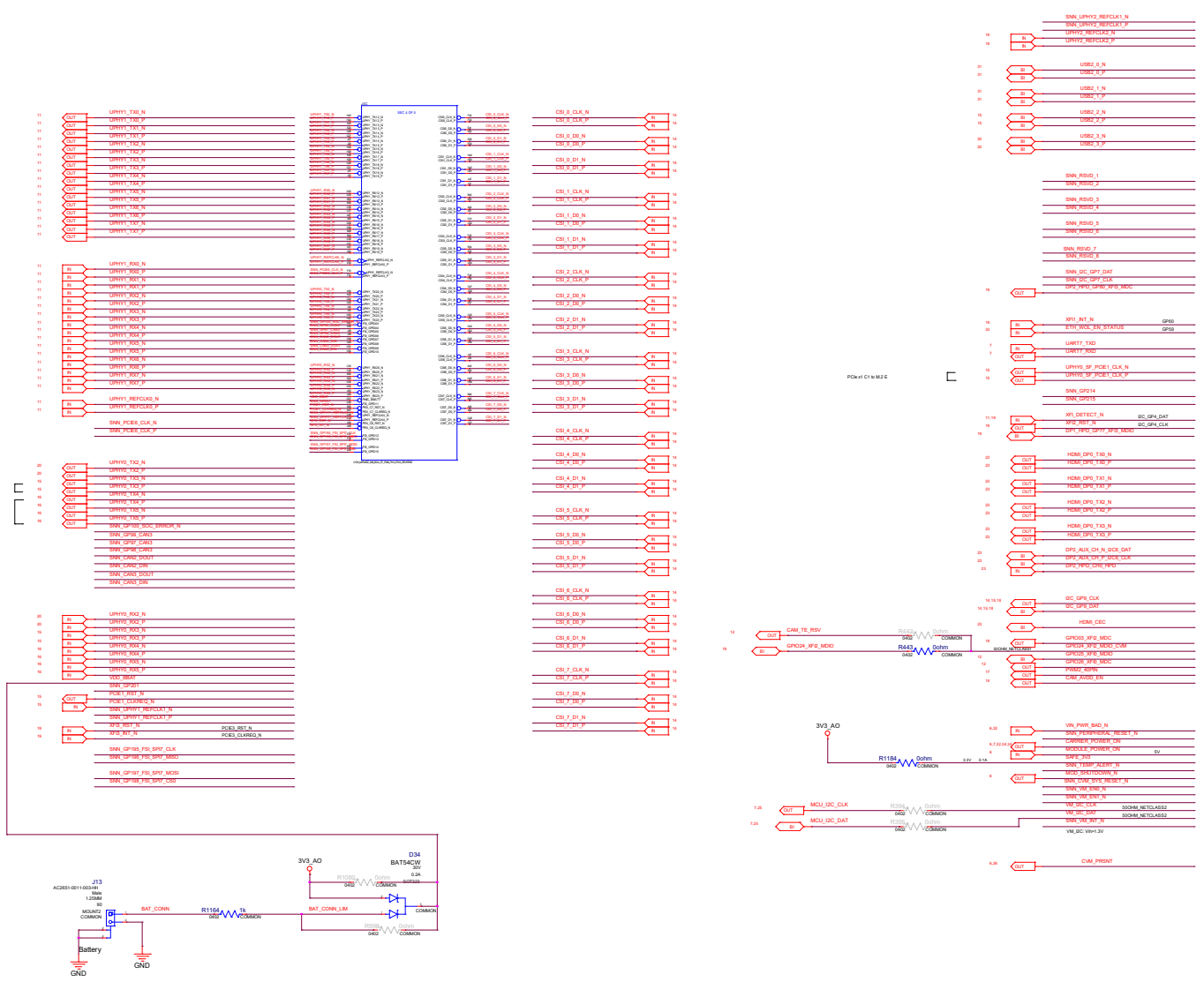

seeed The IoT Hardware Enabler

https://www.seeedstudio.com

Size: Custom	Document Number: 0005_CVM connector 3 of 3	Rev: v1.0
Draw By: Seeed	Date: Friday, June 05, 2026	Sheet: 5 of 38

Button MCU

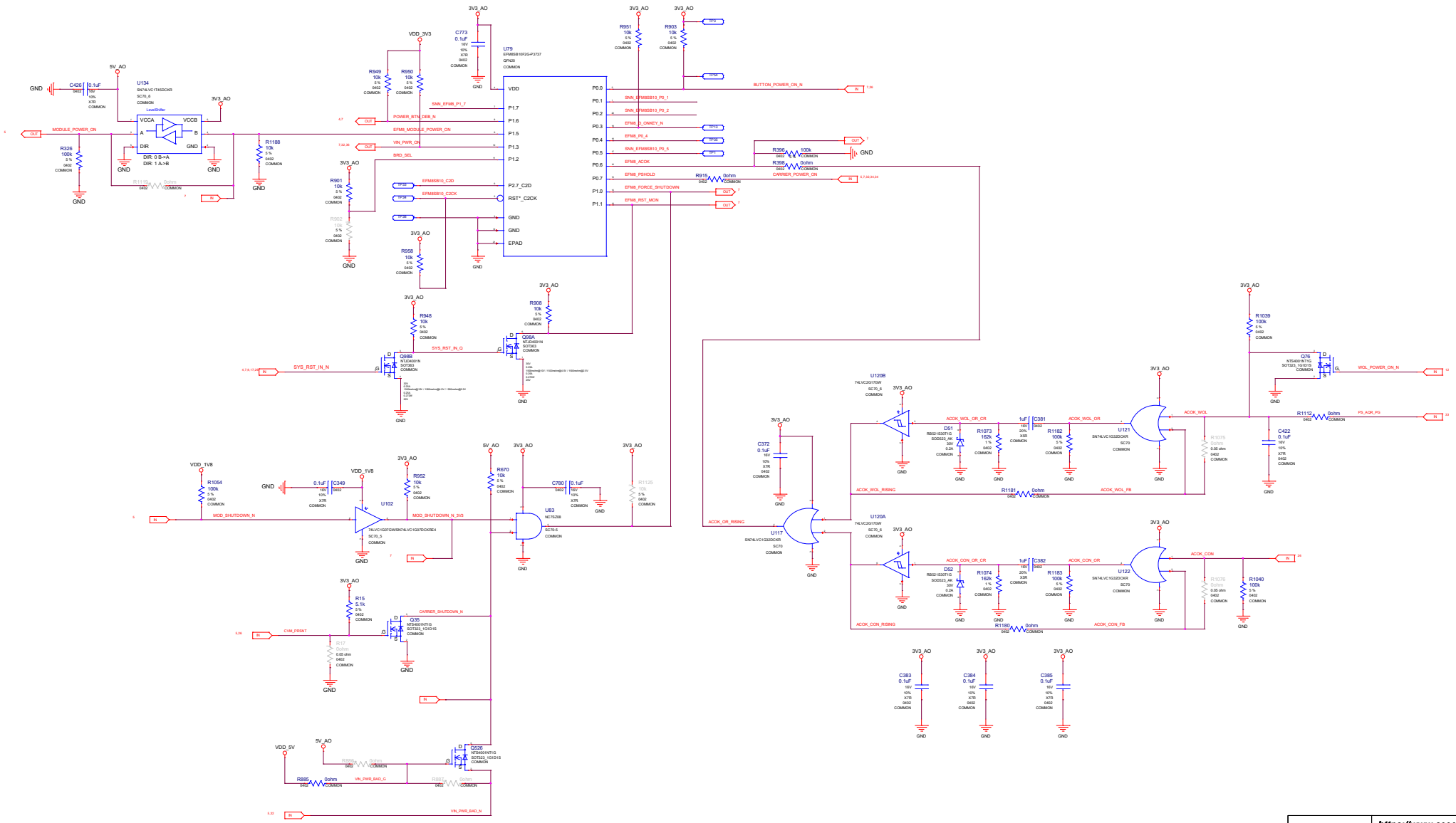

seeed The IoT Hardware Enabler	https://www.seeedstudio.com	
	Title: P3737_A05	
Size: Custom	Document Number: 0006_Button MCU	Rev: v1.0
Draw By: Seeed	Date: Friday, June 05, 2026	Sheet: 6 of 38

Debug MCU

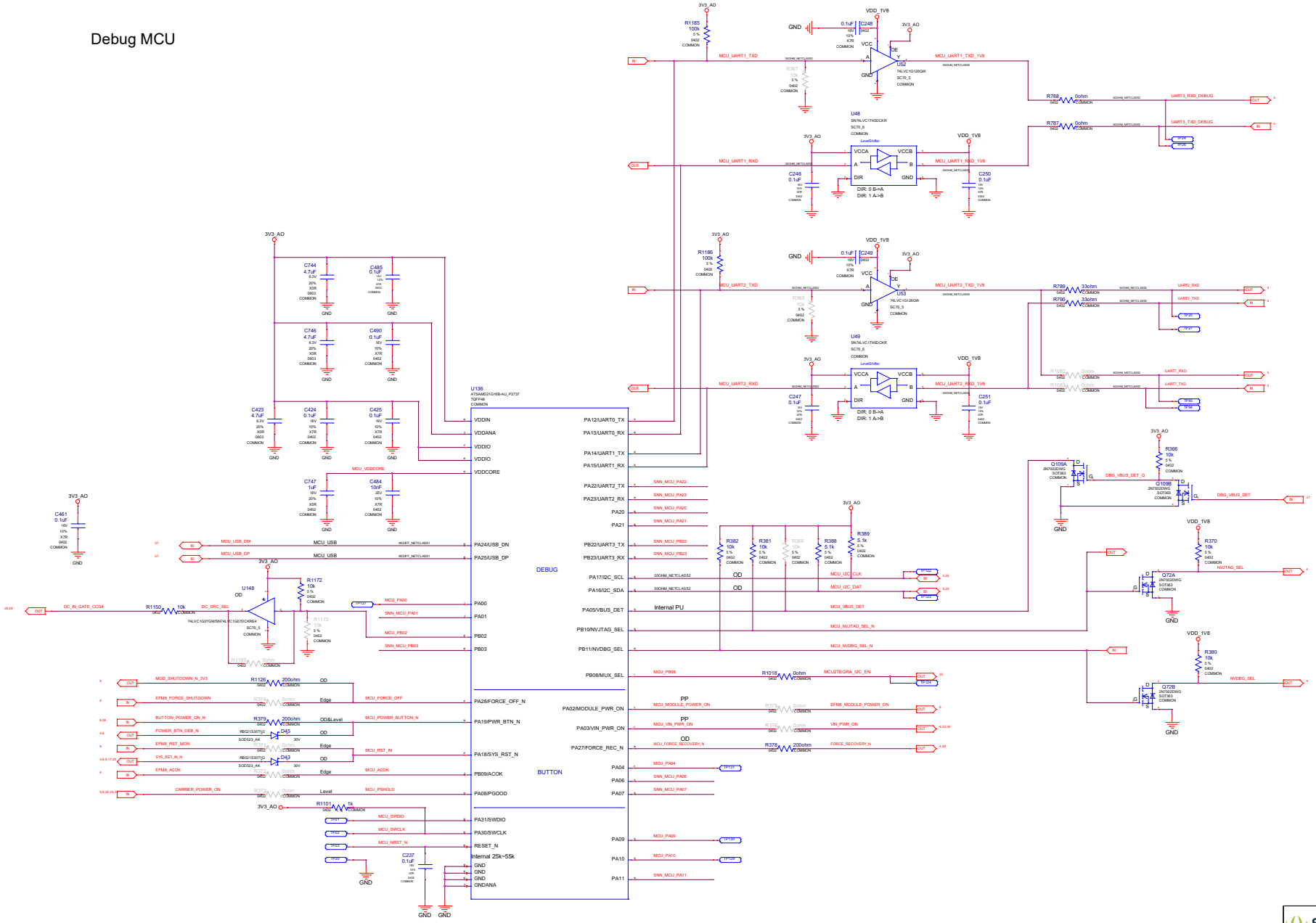
U136
AT5AM021G16B-AU_P3737
TQFP48
COMMON
VDDIN
VDDANA
VDDIO
VDDIO
VDDCORE
PA24/USB_DN
PA25/USB_DP
PA00
PA01
PB02
PB03
PA28/FORCE_OFF_N
PA19/PWR_BTN_N
PA18/SYS_RST_N
PB09/ACOK
PA08/PGOOD
PA31/SWDIO
PA30/SWCLK
RESET_N
Internal 25k~55k
GND
GND
GND
GND/ANA
PA12/UART0_TX
PA13/UART0_RX
PA14/UART1_TX
PA15/UART1_RX
PA22/UART3_TX
PA23/UART3_RX
PA20
PA21
PB22/UART3_TX
PB23/UART3_RX
PA17/I2C_SCL
PA16/I2C_SDA
PA05/VBUS_DET
PB10/NVJTAG_SEL
PB11/NVDBG_SEL
PB08/MUX_SEL
PA02/MODULE_PWR_ON
PA03/VIN_PWR_ON
PA27/FORCE_REC_N
PA04
PA06
PA07
PA09
PA10
PA11
DEBUG
BUTTON
MCU_VDDCORE
MCU_USB_DM
MCU_USB_DP
MCU_USB
MCU_PA00
SNN_MCU_PA01
MCU_PB02
SNN_MCU_PB03
MCU_FORCE_OFF
MCU_POWER_BUTTON_N
MCU_RST_IN
MCU_ACOK
MCU_PSHOLD
MCU_SWDIO
MCU_SWCLK
MCU_NRST_N
MCU_PB08
MCU_PA04
SNN_MCU_PA06
SNN_MCU_PA07
MCU_PA09
MCU_PA10
SNN_MCU_PA11
MCU_I2C_CLK
MCU_I2C_DAT
MCU_VBUS_DET
MCU_NVJTAG_SEL_N
MCU_NVDBG_SEL_N
MCU12TEGRA_I2C_EN
EFM8_MODULE_POWER_ON
VIN_PWR_ON
FORCE_RECOVERY_N
MOD_SHUTDOWN_N_3V3
EFM8_FORCE_SHUTDOWN
BUTTON_POWER_ON_N
POWER_BTN_DEB_N
EFM8_RST_MON
SYS_RST_IN_N
EFM8_ACOK
CARRIER_POWER_ON
DC_IN_GATE_CCG4
DC_SRC_SEL
MCU_UART1_TXD
MCU_UART1_RXD
MCU_UART1_TXD_1V8
MCU_UART1_RXD_1V8
MCU_UART2_TXD
MCU_UART2_RXD
MCU_UART2_TXD_1V8
MCU_UART2_RXD_1V8
UART3_RXD_DEBUG
UART3_TXD_DEBUG
UART2_RXD
UART2_TXD
UART7_RXD
UART7_TXD
DBG_VBUS_DET_Q
DBG_VBUS_DET
NVJTAG_SEL
NVDBG_SEL
U52
74LVC1G126GW
SC70_5
U48
SN74LVC1T45DCKR
SC70_6
U53
74LVC1G126GW
U49
LevelShifter
VCCA
VCCB
DIR
DIR: 0 B->A
DIR: 1 A->B
U148
74LVC1G07GW/SN74LVC1G07CKR
Q509A
Q109B
Q72A
Q72B
2N7002DWG
SOT363
D45
D43
RB521S30T1G
SOD523_AK
30V
3V3_AO
VDD_1V8
GND
R1185
R1186
R1150
R1172
R1173
R1187
R1126
R1101
R1018
R1019
R1020
R1021
R1022
R1023
R1024
R1025
R1026
R1027
R1028
R1029
R1030
R1031
R1032
R1033
R1034
R1035
R1036
R1037
R1038
R1039
R1040
R1041
R1042
R1043
R1044
R1045
R1046
R1047
R1048
R1049
R1050
R1051
R1052
R1053
R1054
R1055
R1056
R1057

seeed The IoT Hardware Enabler		https://www.seeedstudio.com	
		Title: P3737_A05	
Size: Custom	Document Number: 0008_Reserved		Rev: v1.0
Draw By: Seeed	Date: Friday, June 05, 2026		Sheet: 8 of 38

AP DEBUG CONNECTOR

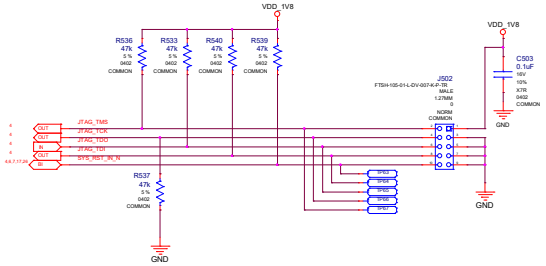

JTAG

seeed The IoT Hardware Enabler	https://www.seeedstudio.com	
	Title: P3737_A05	
Size: Custom	Document Number: 0009_JTAG Connector	Rev: v1.0
Draw By: Seeed	Date: Friday, June 05, 2026	Sheet: 9 of 38

ID EEPROM

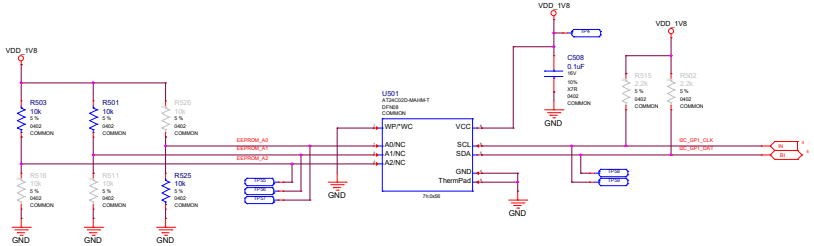

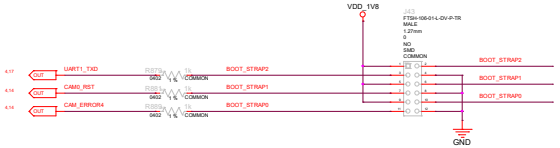

seeed The IoT Hardware Enabler	https://www.seeedstudio.com	
	Title: P3737_A05	
Size: Custom	Document Number: 0010_EEPROM	Rev: v1.0
Draw By: Seeed	Date: Friday, June 05, 2026	Sheet: 10 of 38

PCIe X16 Connector

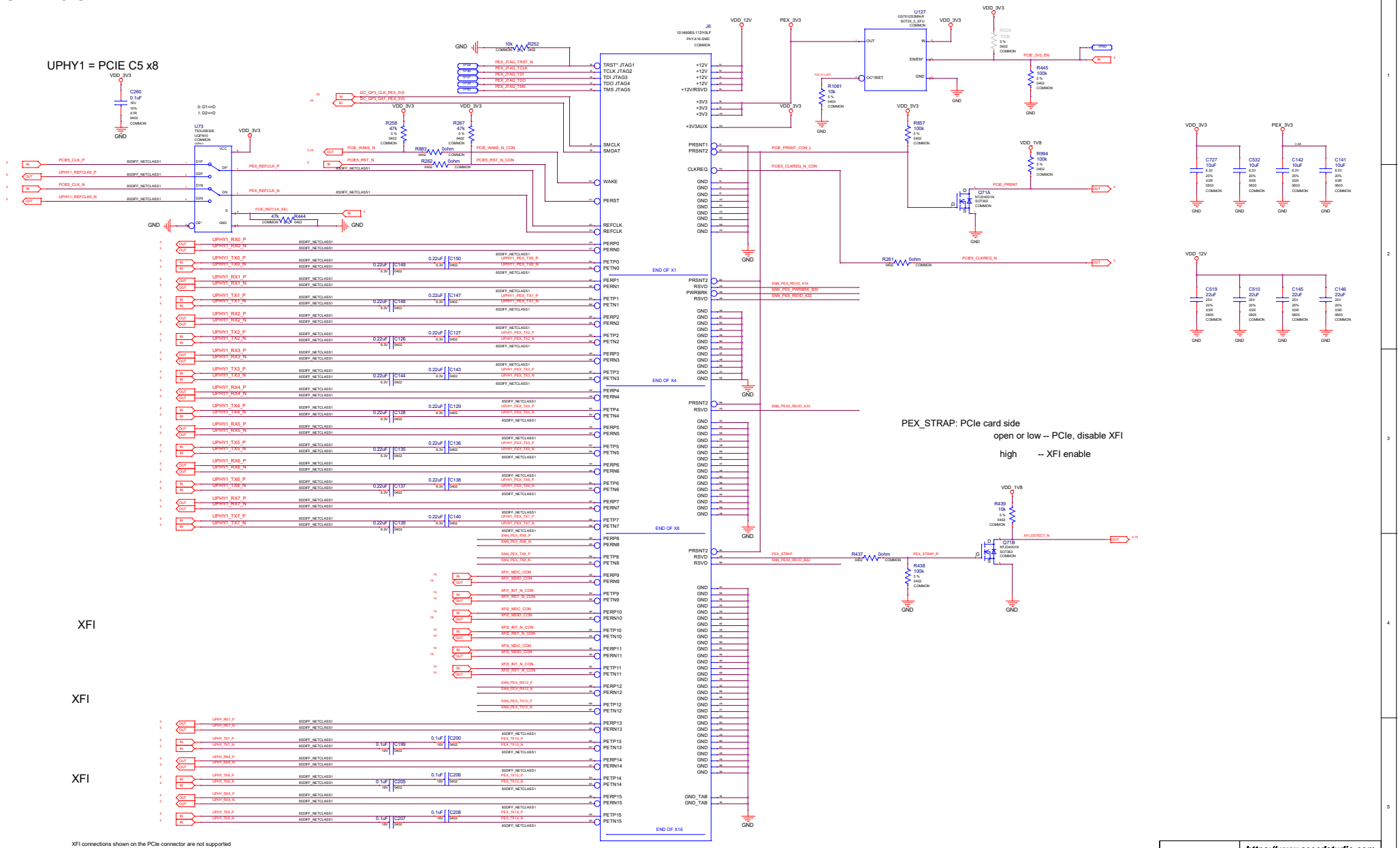

seeed The IoT Hardware Enabler

https://www.seeedstudio.com

Title: P3737_A05		
Size: Custom	Document Number: 0011_PCIe x16 Connector	Rev: v1.0
Draw By: Seeed	Date: Friday, June 05, 2026	Sheet: 11 of 38

10GB ETH PHY AQR113C

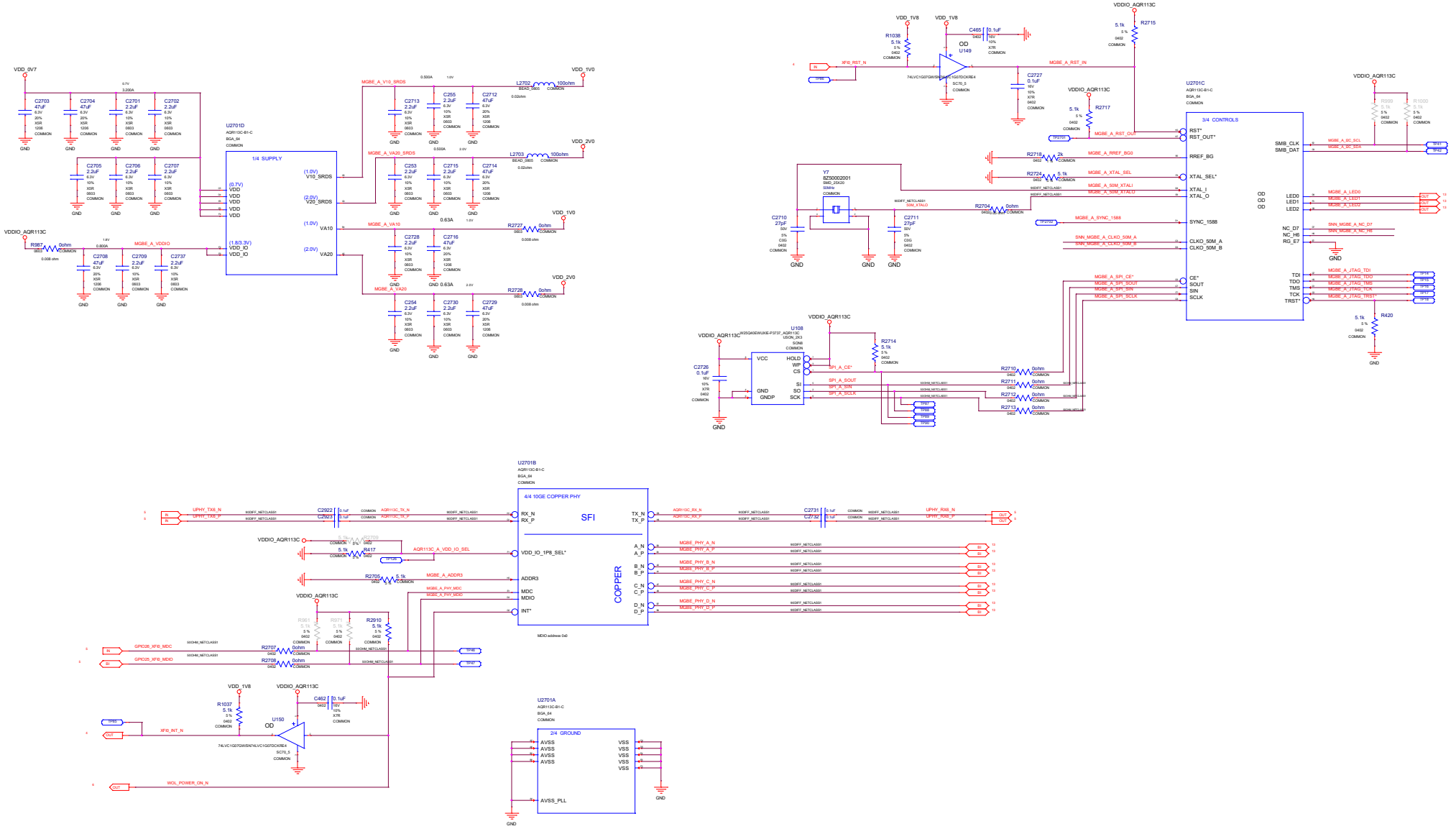

support lane flip and polarity correction

automatic P/N correction
FW provision on lane flip

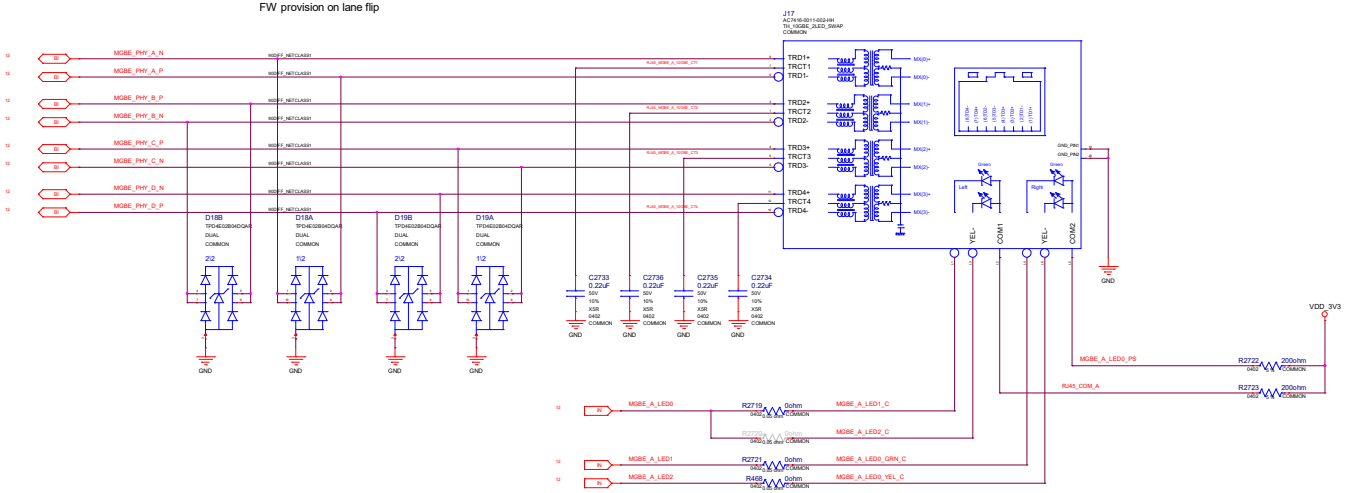

seeed The IoT Hardware Enabler	https://www.seeedstudio.com	
	Title: P3737_A05	
Size: Custom	Document Number: 0013_10Gb RJ45 Connector	Rev: v1.0
Draw By: Seeed	Date: Friday, June 05, 2026	Sheet: 13 of 38

Camera Connector

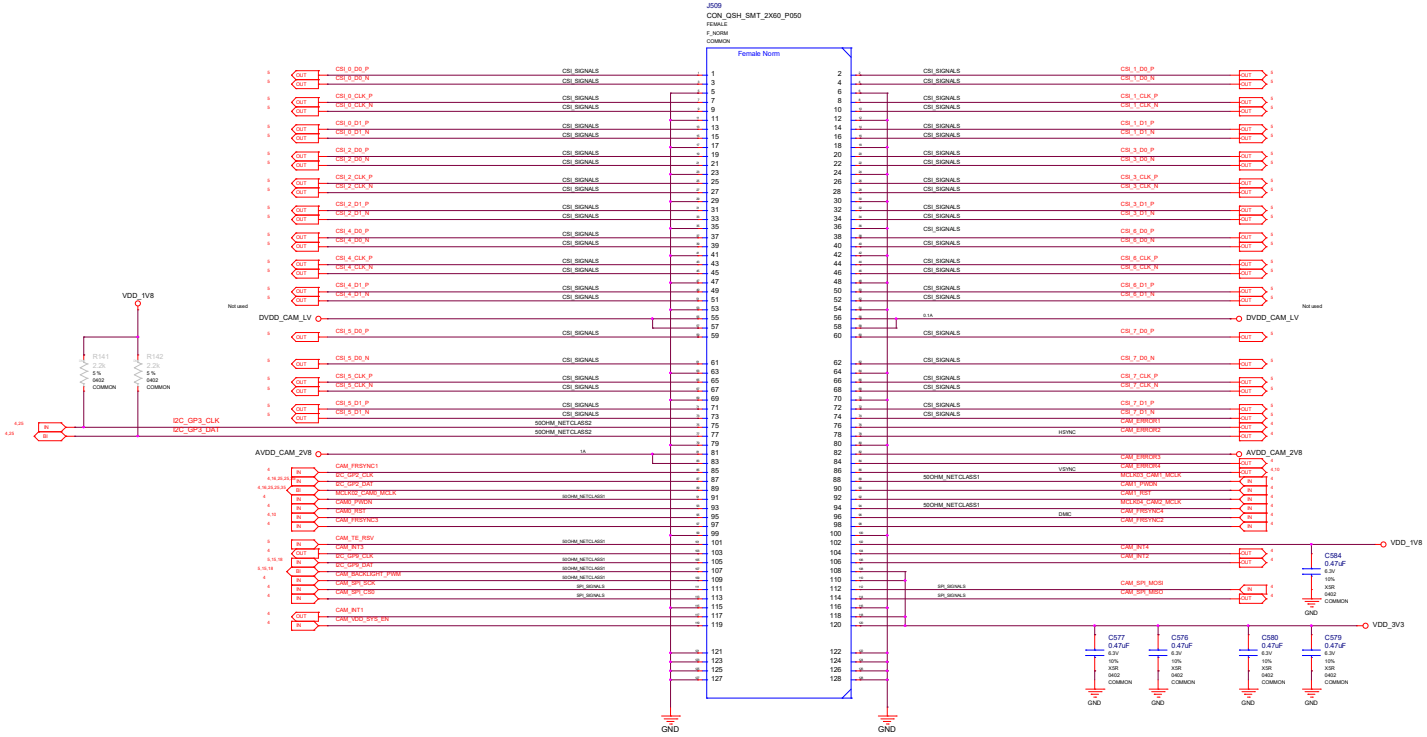

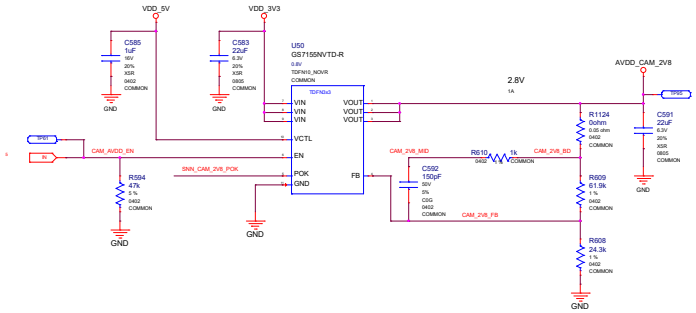

seeed The IoT Hardware Enabler

https://www.seeedstudio.com

Title: P3737_A05		
Size: Custom	Document Number: 0014_Camera connector	Rev: v1.0
Draw By: Seeed	Date: Friday, June 05, 2026	Sheet: 14 of 38

M.2 Key E Connector

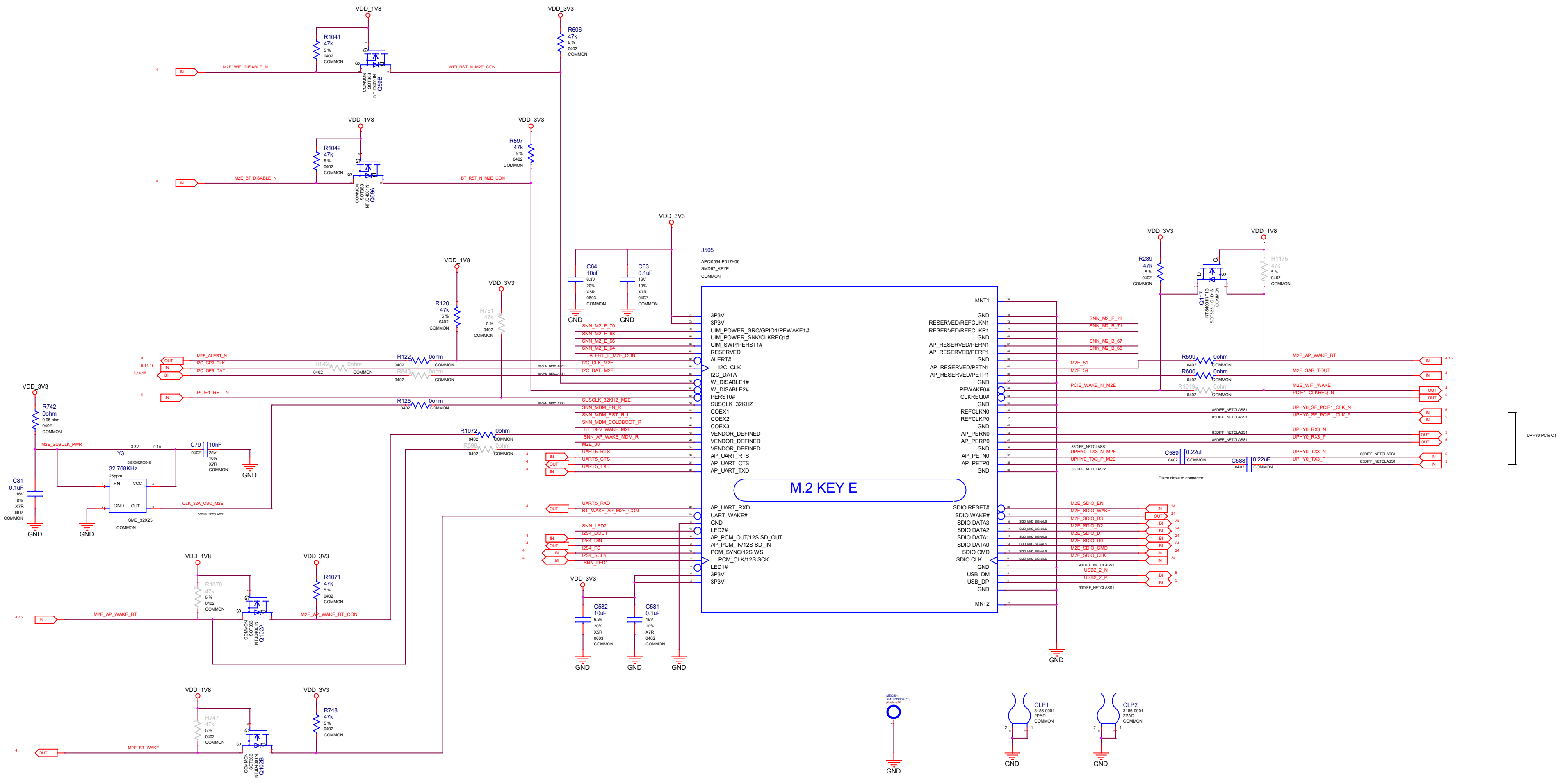

https://www.seeedstudio.com

seeed The IoT Hardware Enabler

Title: P3737_A05

Size: Custom	Document Number: 0015_M.2 Key E	Rev: v1.0
Draw By: Seeed	Date: Friday, June 05, 2026	Sheet: 15 of 38

M.2 Key M Connector

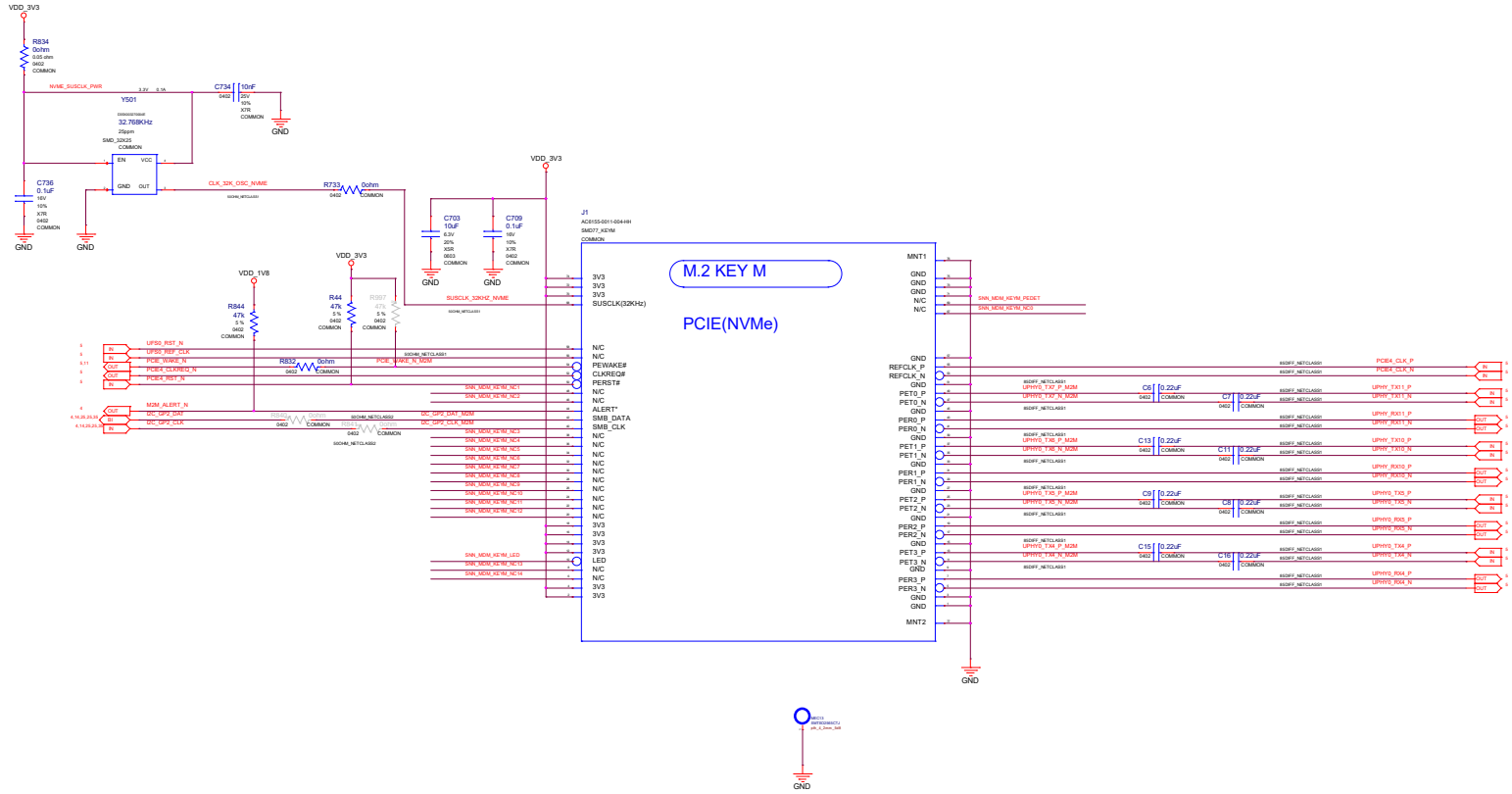

seeed The IoT Hardware Enabler	https://www.seeedstudio.com		
	Title: P3737_A05		
Size: Custom	Document Number: 0016_M.2 Key M		Rev: v1.0
Draw By: Seeed	Date: Friday, June 05, 2026		Sheet: 16 of 38

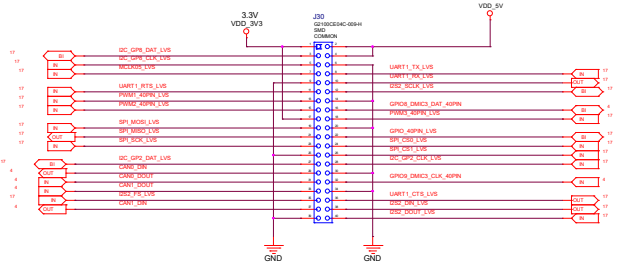

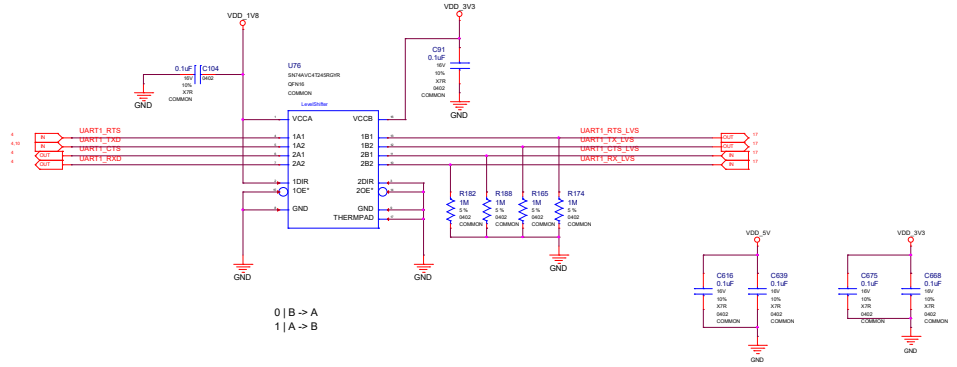

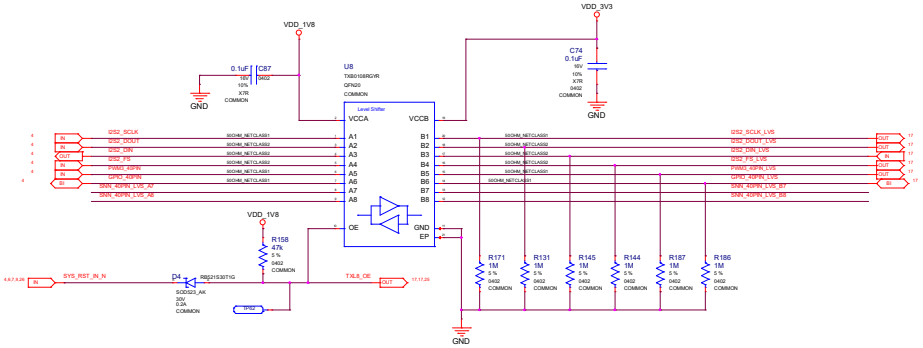

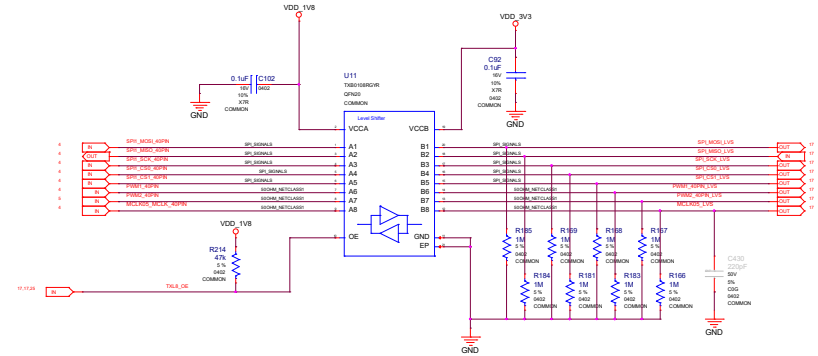

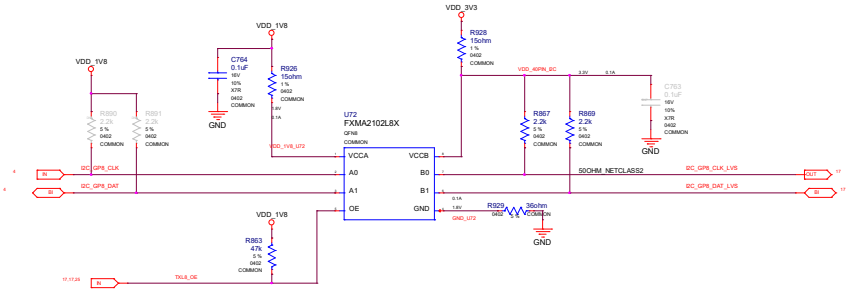

seeed
The IoT Hardware Enabler

https://www.seeedstudio.com

Size: Custom	Document Number: 0017_40 Pin Header	Rev: v1.0
Draw By: Seeed	Date: Friday, June 05, 2026	Sheet: 17 of 38

Title: P3737_A05

CODEC (I2S1)

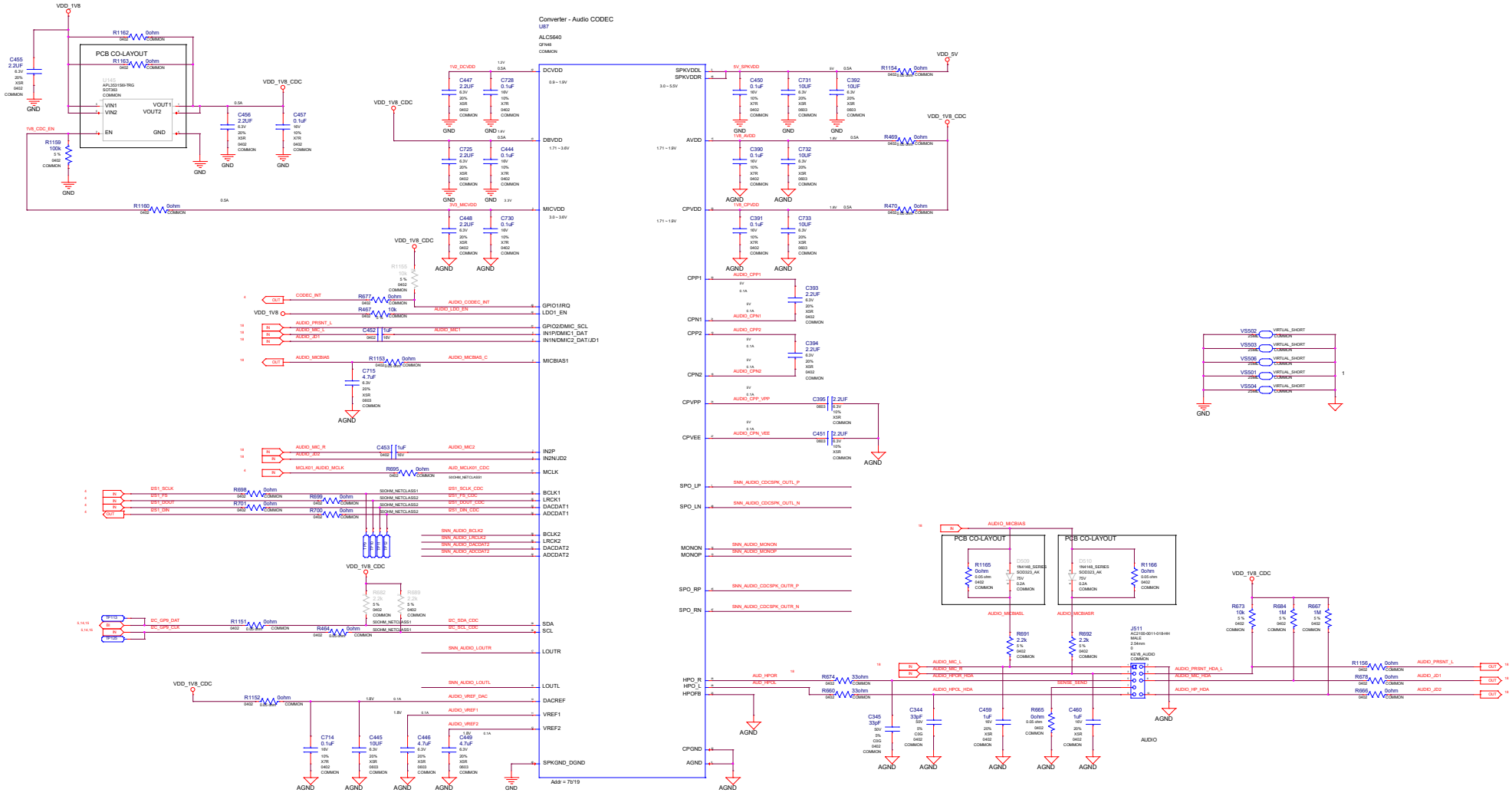

seeed The IoT Hardware Enabler

https://www.seeedstudio.com

Title: P3737_A05		
Size: Custom	Document Number: 0018_Codec and HD Audio header	Rev: v1.0
Draw By: Seeed	Date: Friday, June 05, 2026	Sheet: 18 of 38

MGBE

MGBE reference clock

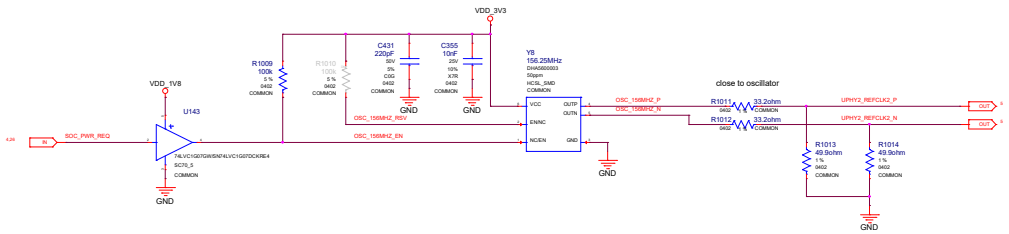

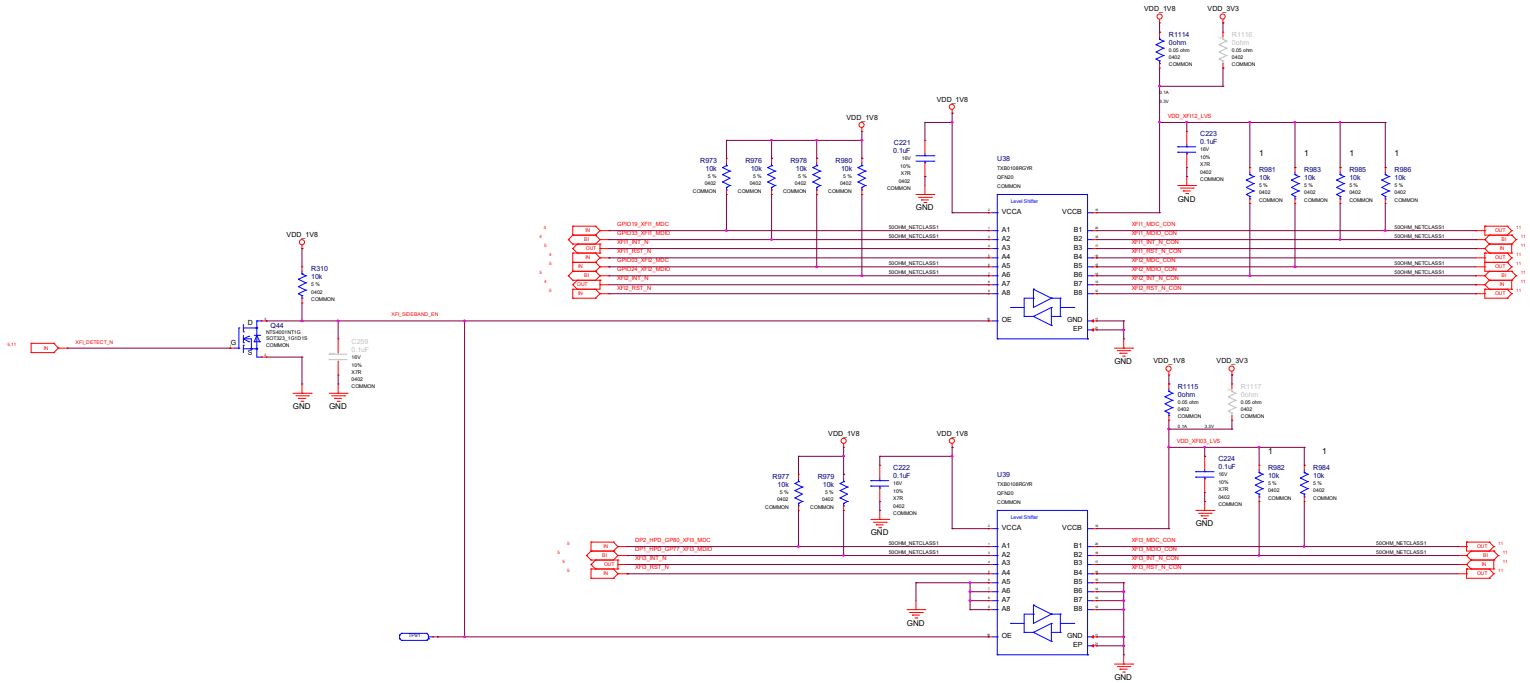

seeed The IoT Hardware Enabler	https://www.seeedstudio.com	
	Title: P3737_A05	
Size: Custom	Document Number: 0019_XFI Mux	Rev: v1.0
Draw By: Seeed	Date: Friday, June 05, 2026	Sheet: 19 of 38

USB3.1 GEN2 HUB x4 PORTS

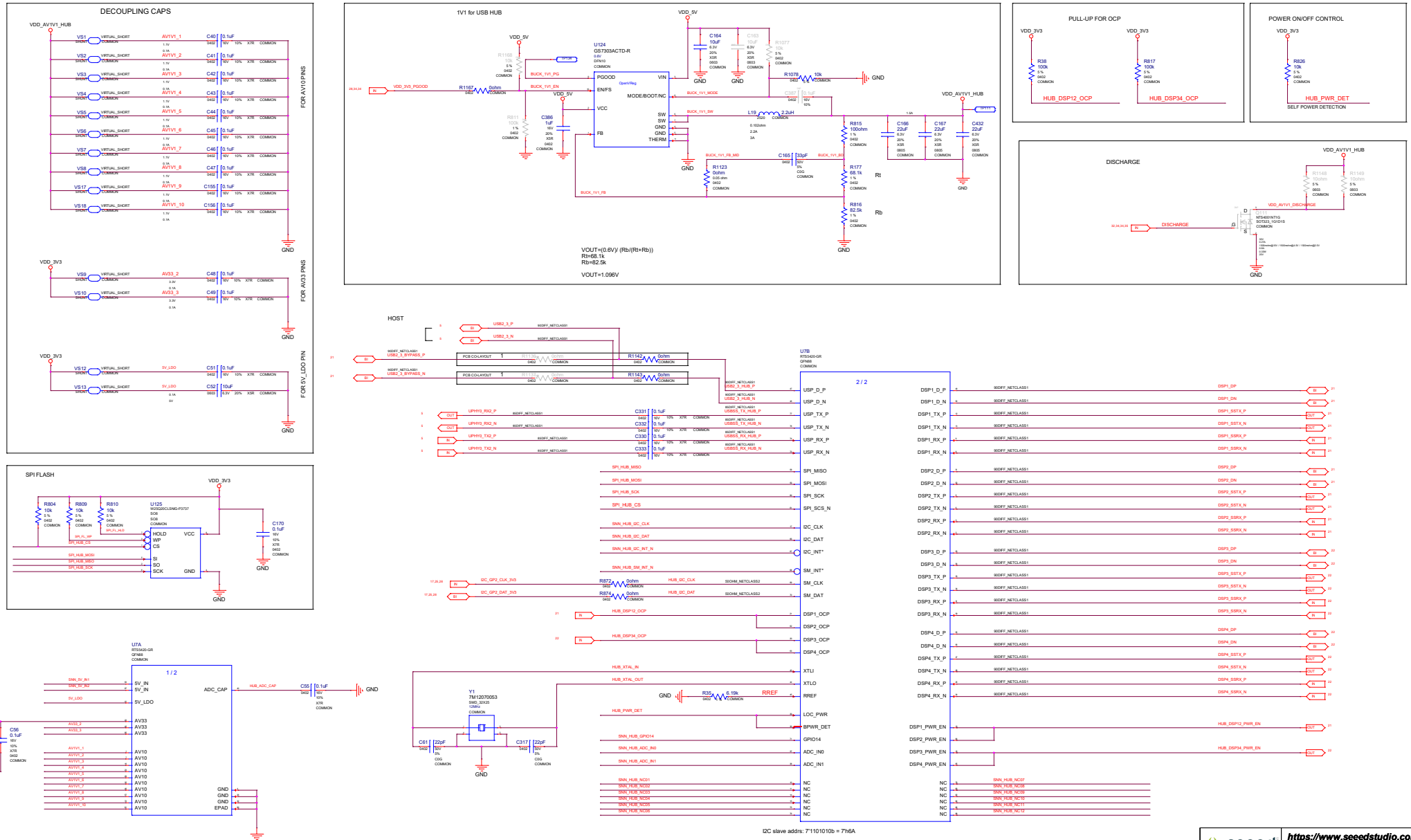

seeed The IoT Hardware Enabler

https://www.seeedstudio.com

Title: P3737_A05		
Size: Custom	Document Number: 0020_USB3.1 HUB	Rev: v1.0
Draw By: Seeed	Date: Friday, June 05, 2026	Sheet: 20 of 38

USB3.1 TYPE-A x2 (A)

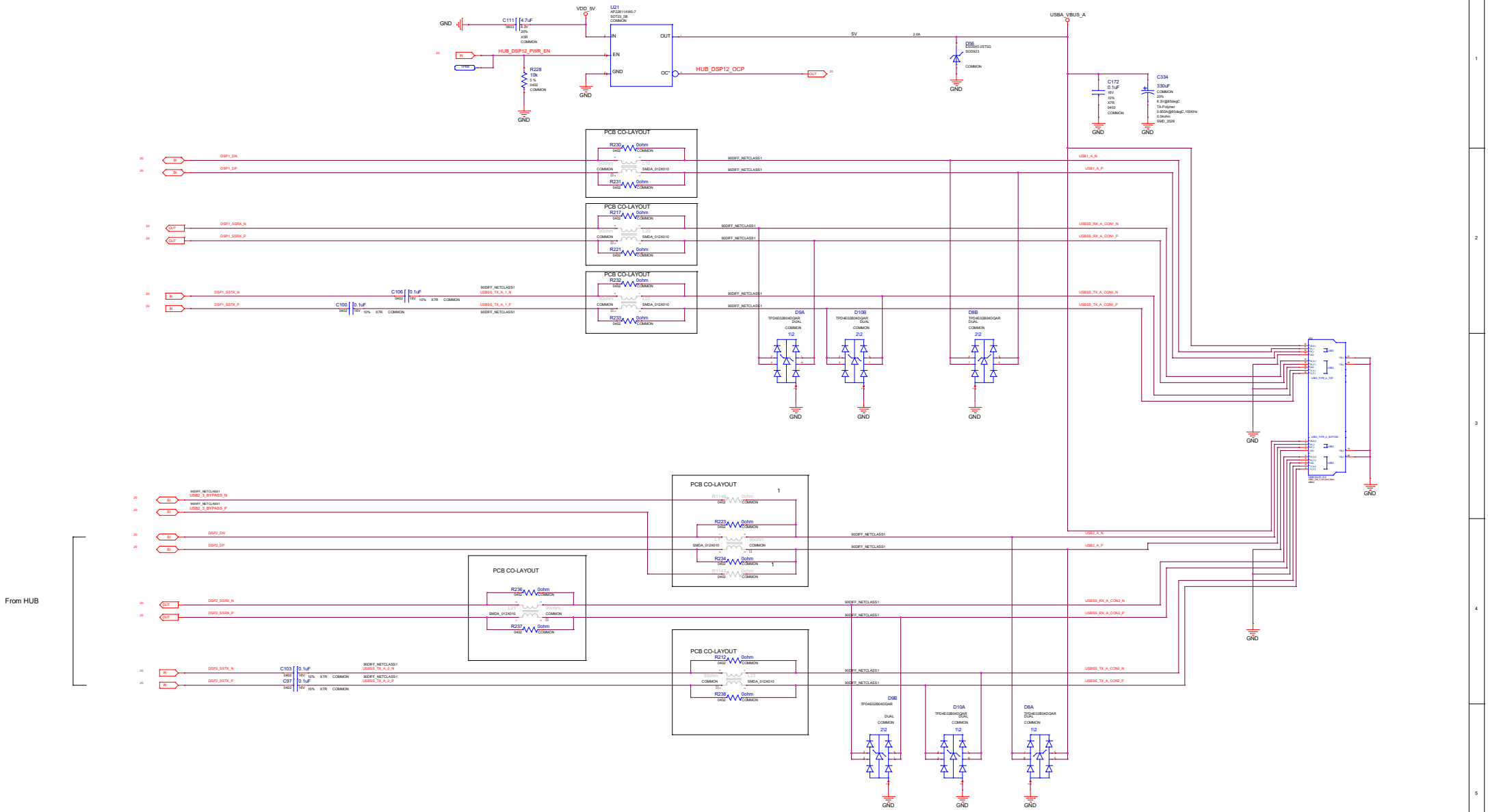

seeed The IoT Hardware Enabler

https://www.seeedstudio.com

Title: P3737_A05

Size: Custom	Document Number: 0021_USB3.1 TypeA x2 _A_	Rev: v1.0
Draw By: Seeed	Date: Friday, June 05, 2026	Sheet: 21 of 38

USB3.1 TYPE-A x2 (B)

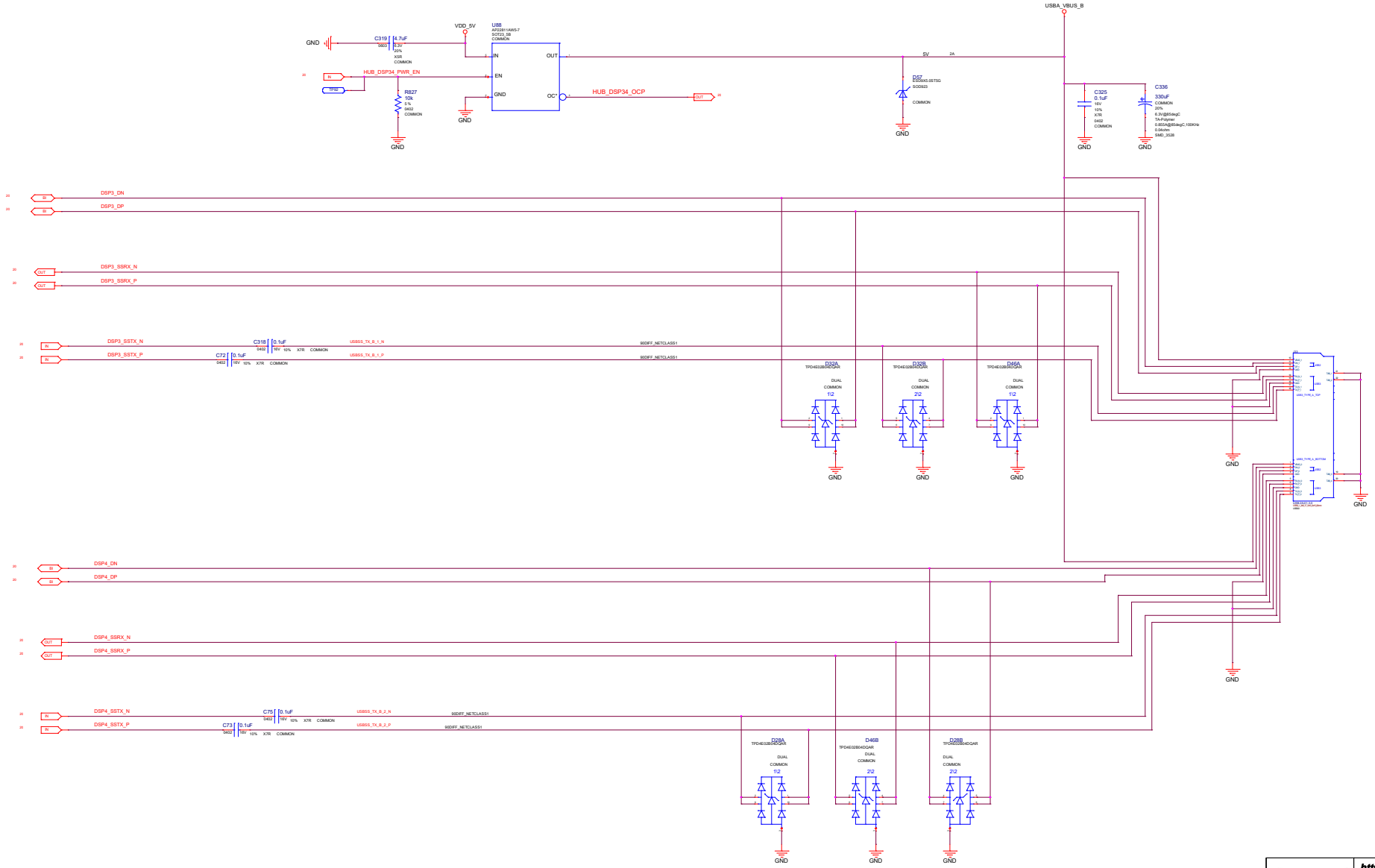

seeed
The IoT Hardware Enabler

https://www.seeedstudio.com

Title: P3737_A05

Size: Custom	Document Number: 0022_USB3.1 TypeA x2 _B_	Rev: v1.0
Draw By: Seeed	Date: Friday, June 05, 2026	Sheet: 22 of 38

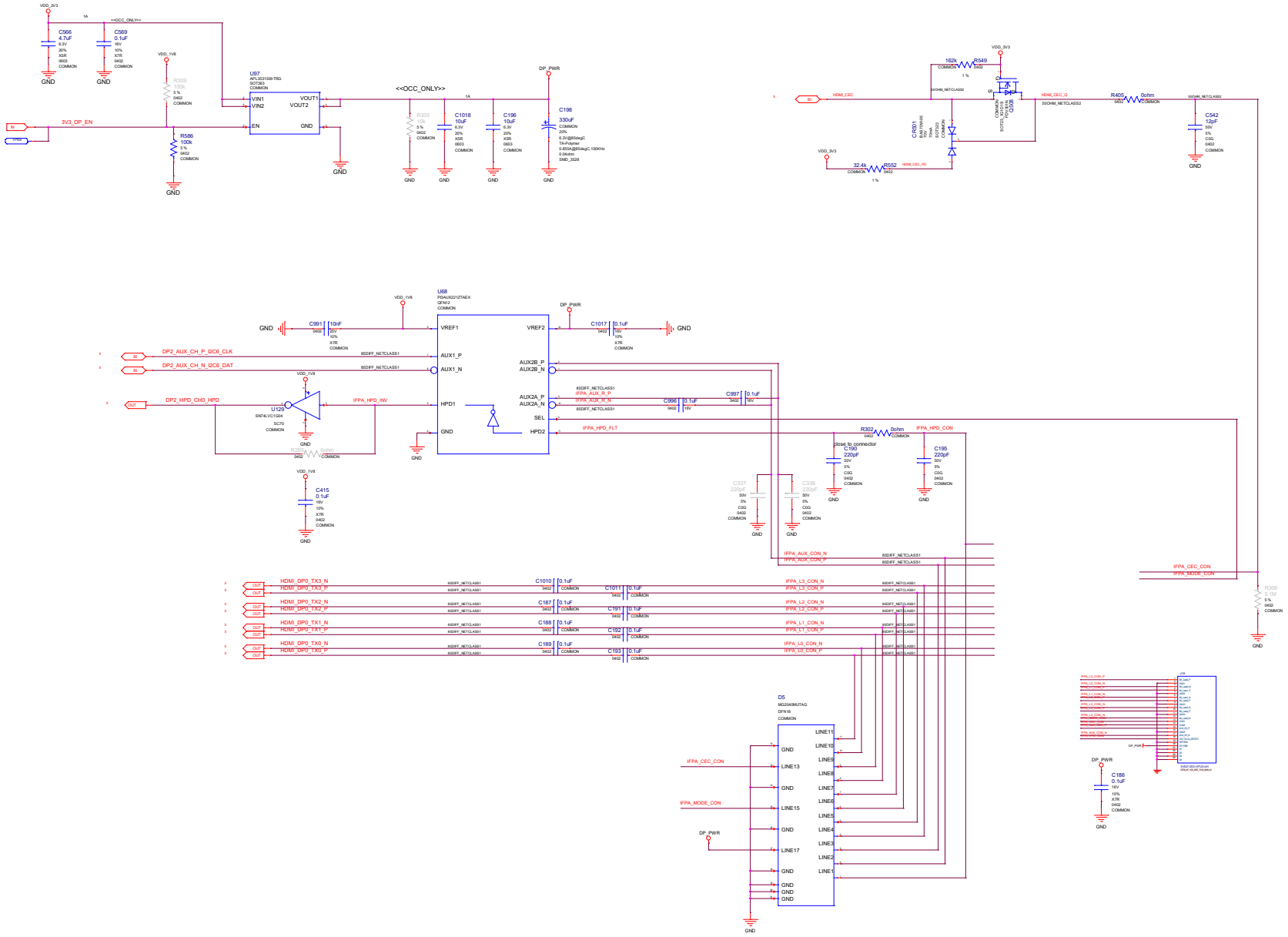

seeed
The IoT Hardware Enabler

https://www.seeedstudio.com

Title: P3737_A05

Size: Custom	Document Number: 0023_DP Connector	Rev: v1.0
Draw By: Seeed	Date: Friday, June 05, 2026	Sheet: 23 of 38

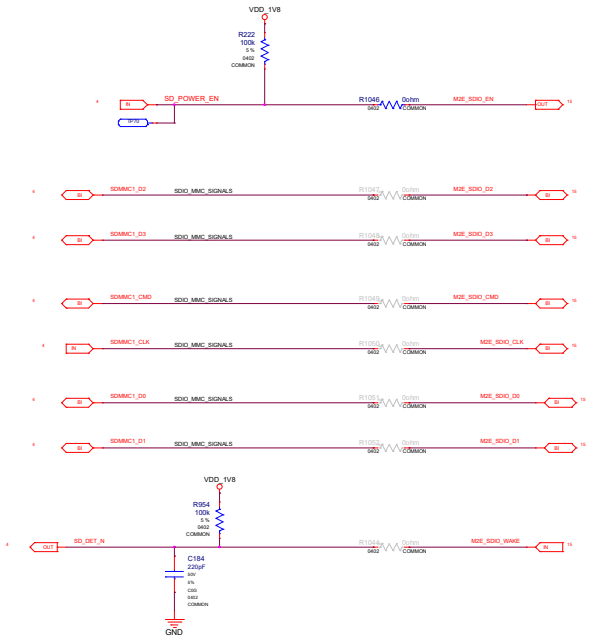

seeed The IoT Hardware Enabler

https://www.seeedstudio.com

Title: P3737_A05		
Size: Custom	Document Number: 0024_microSD Socket	Rev: v1.0
Draw By: Seeed	Date: Friday, June 05, 2026	Sheet: 24 of 38

I2C GP2 LEVEL SHIFTER/REPEATER

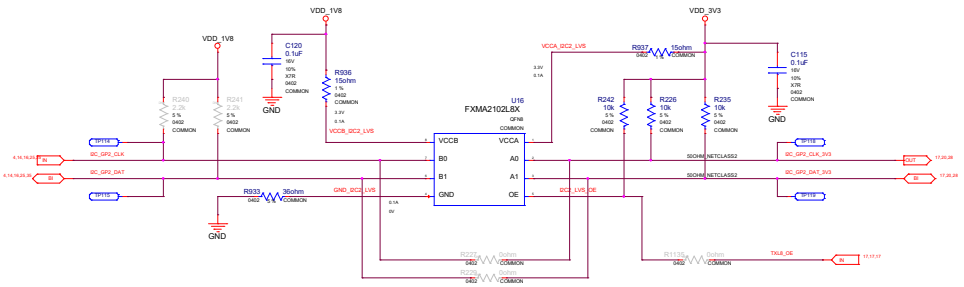

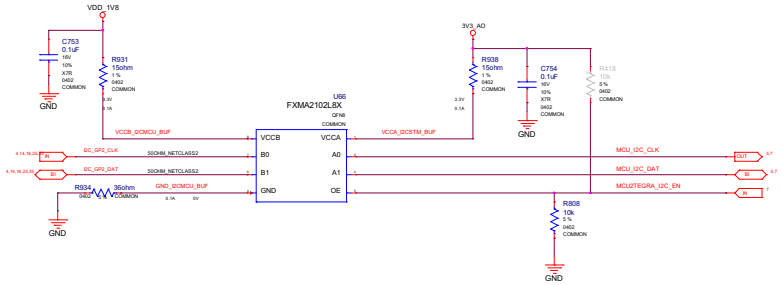

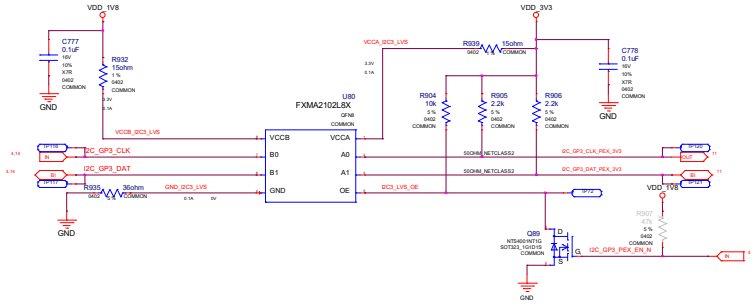

seeed
The IoT Hardware Enabler

https://www.seeedstudio.com

Title: P3737_A05		
Size: Custom	Document Number: 0025_I2C Levelshifter	Rev: v1.0
Draw By: Seeed	Date: Friday, June 05, 2026	Sheet: 25 of 38

Buttons & Fan

POWER

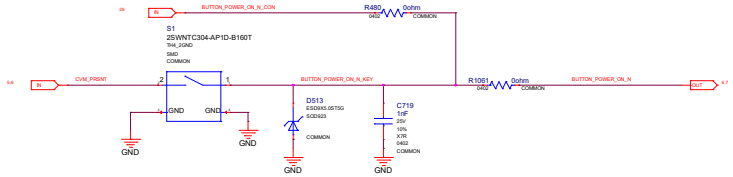

RESET

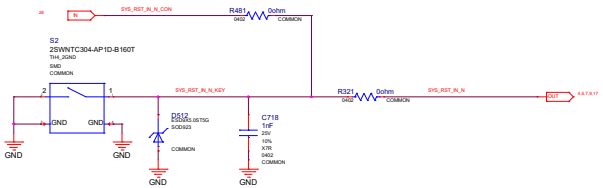

FORCE_RECOVERY

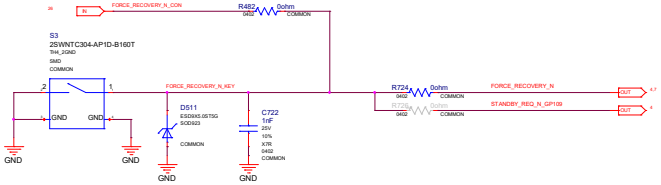

Automation Header

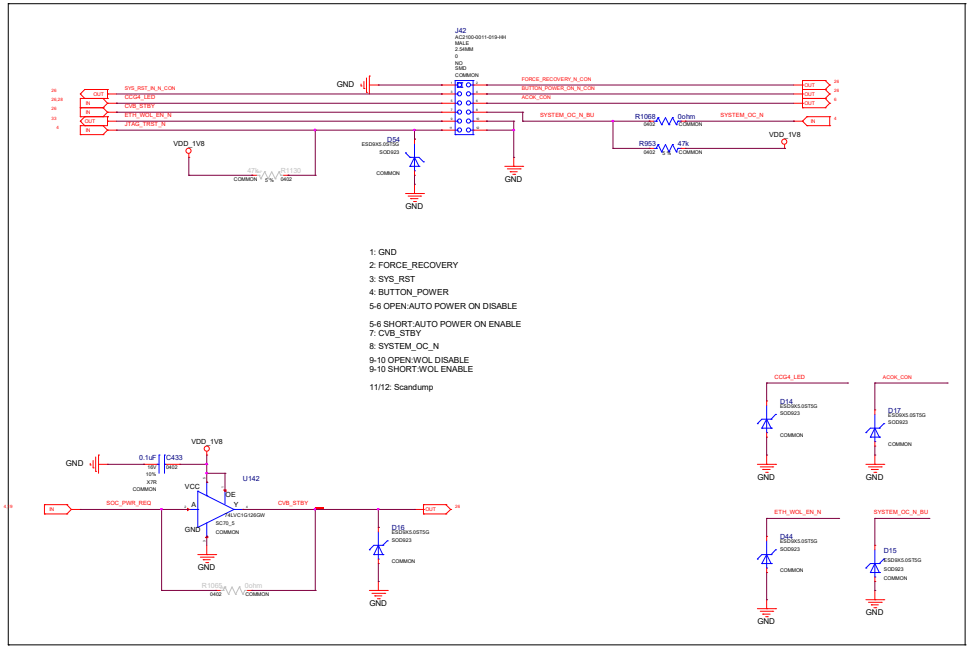

LED

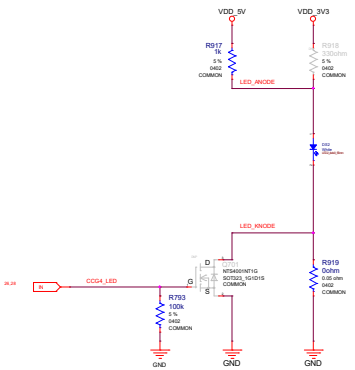

SoC Fan Header 4pin

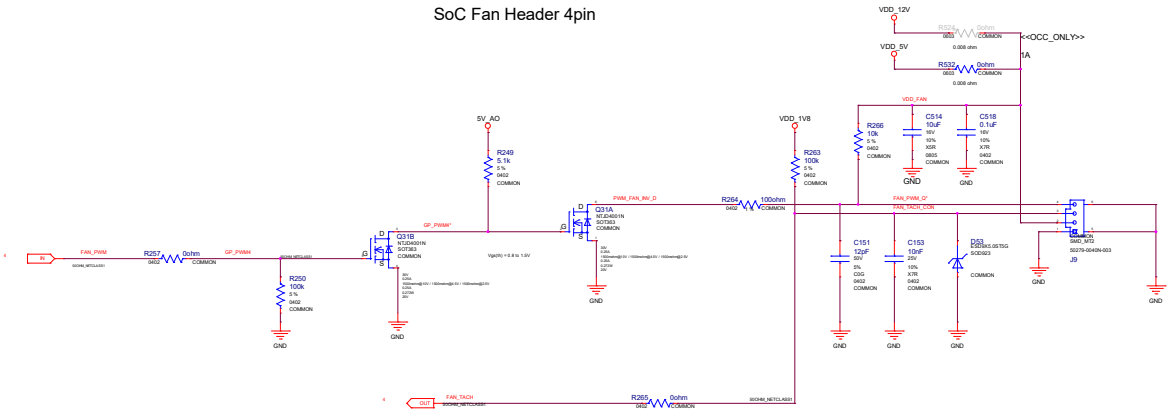

seeed The IoT Hardware Enabler	https://www.seeedstudio.com	
	Title: P3737_A05	
Size: Custom	Document Number: 0026_Buttons & Fan	Rev: v1.0
Draw By: Seeed	Date: Friday, June 05, 2026	Sheet: 26 of 38

MICROUSB

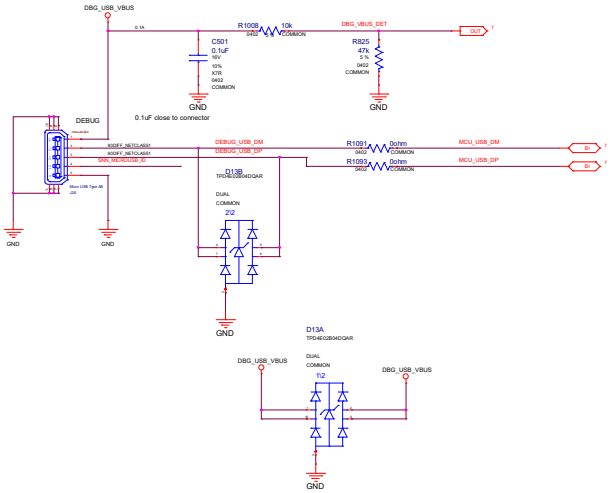

seeed The IoT Hardware Enabler

https://www.seeedstudio.com

Title: P3737_A05		
Size: Custom	Document Number: 0027_USB Debug Connector	Rev: v1.0
Draw By: Seeed	Date: Friday, June 05, 2026	Sheet: 27 of 38

USB PD Controller

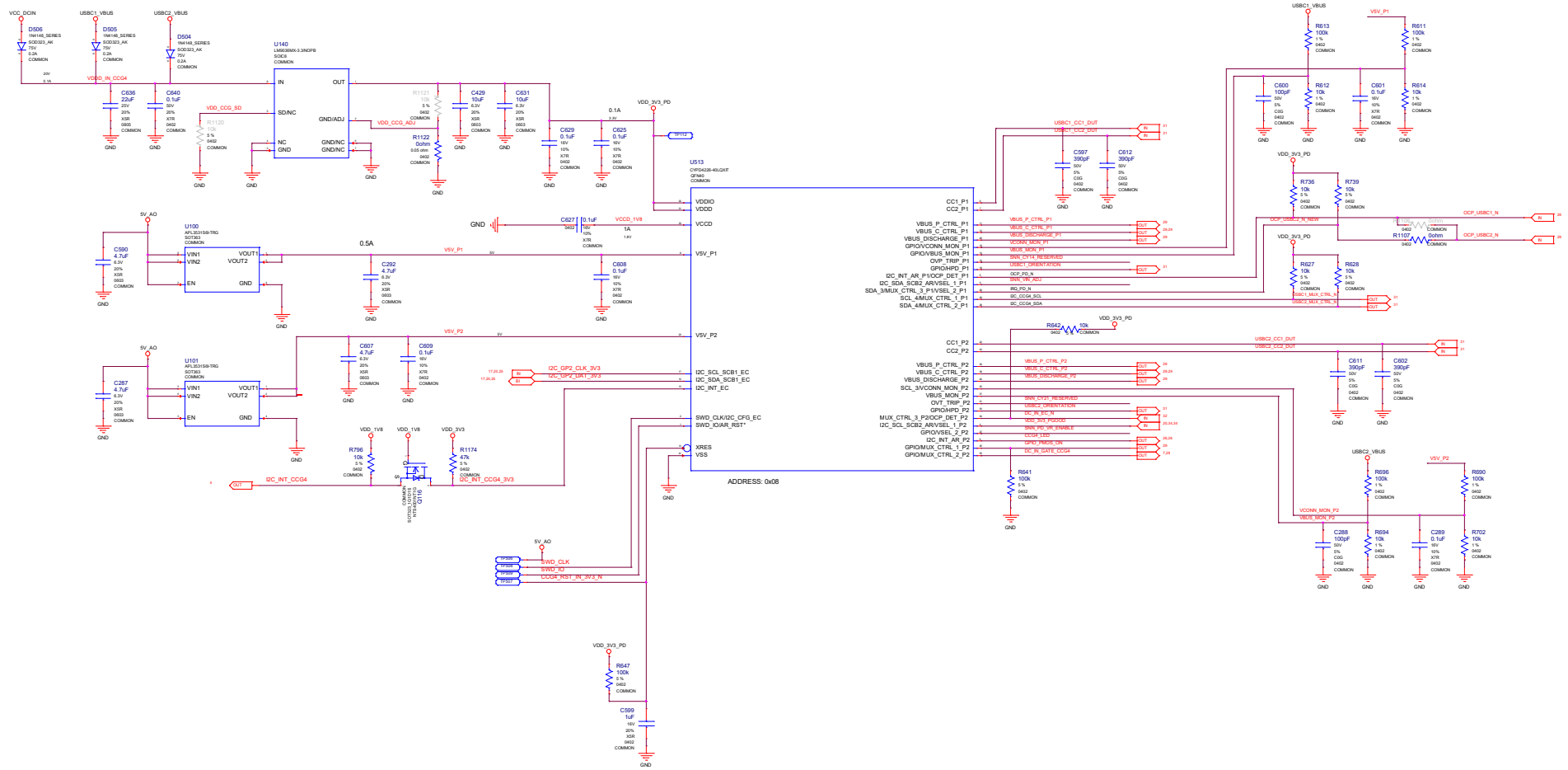

seeed The IoT Hardware Enabler

https://www.seeedstudio.com

Title: P3737_A05		
Size: Custom	Document Number: 0028_USB PD Controller	Rev: v1.0
Draw By: Seeed	Date: Friday, June 05, 2026	Sheet: 28 of 38

USB PD FET logic

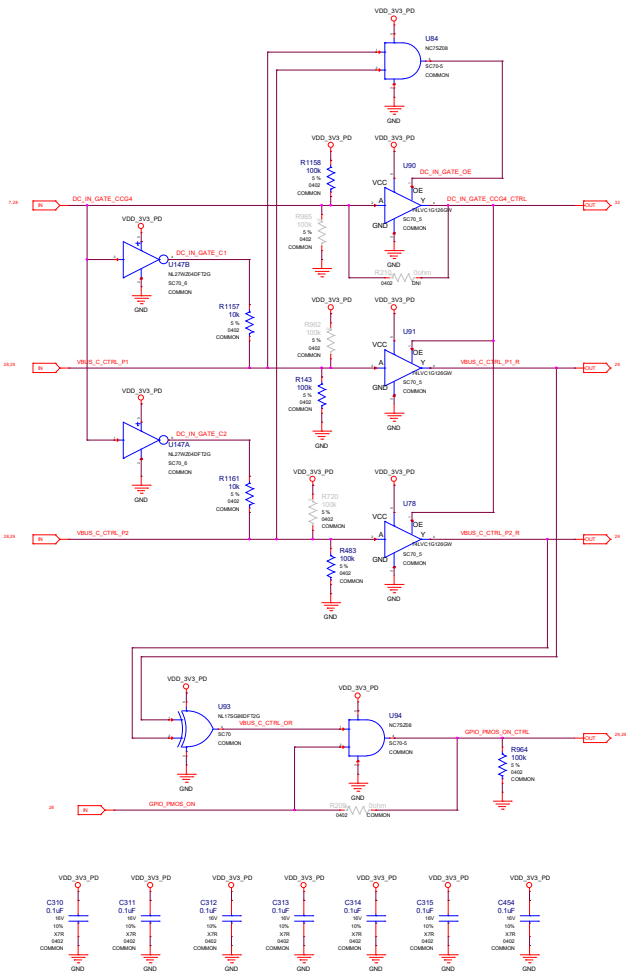

USB PD Power Path

South USB-C

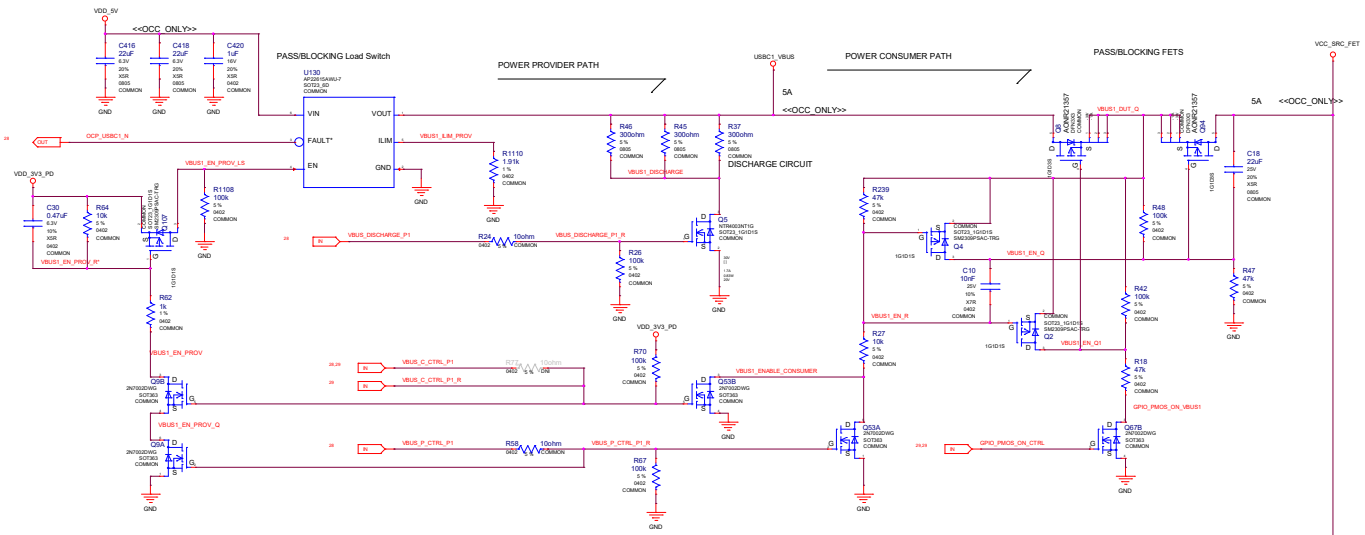

North USB-C (flashing port)

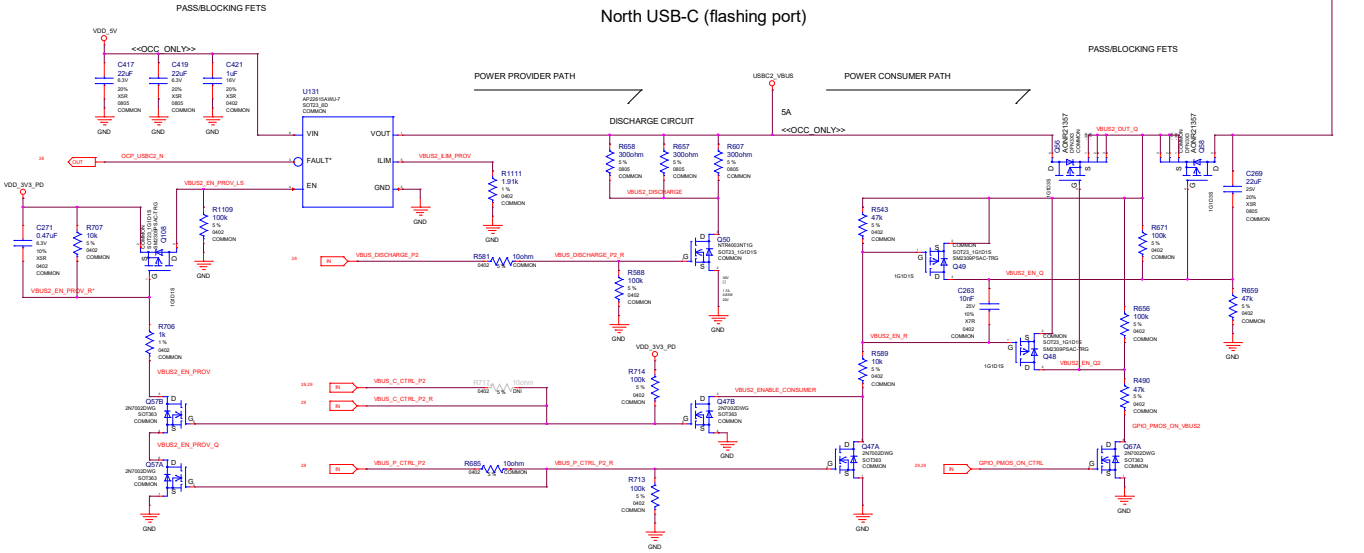

seeed The IoT Hardware Enabler

https://www.seeedstudio.com

Size: Custom	Document Number: 0029_USB PD Path	Rev: v1.0
Draw By: Seeed	Date: Friday, June 05, 2026	Sheet: 29 of 38

seeed The IoT Hardware Enabler		https://www.seeedstudio.com	
		Title: P3737_A05	
Size: Custom	Document Number: 0030_Reserved		Rev: v1.0
Draw By: Seeed	Date: Friday, June 05, 2026		Sheet: 30 of 38

USB Type-C Connector

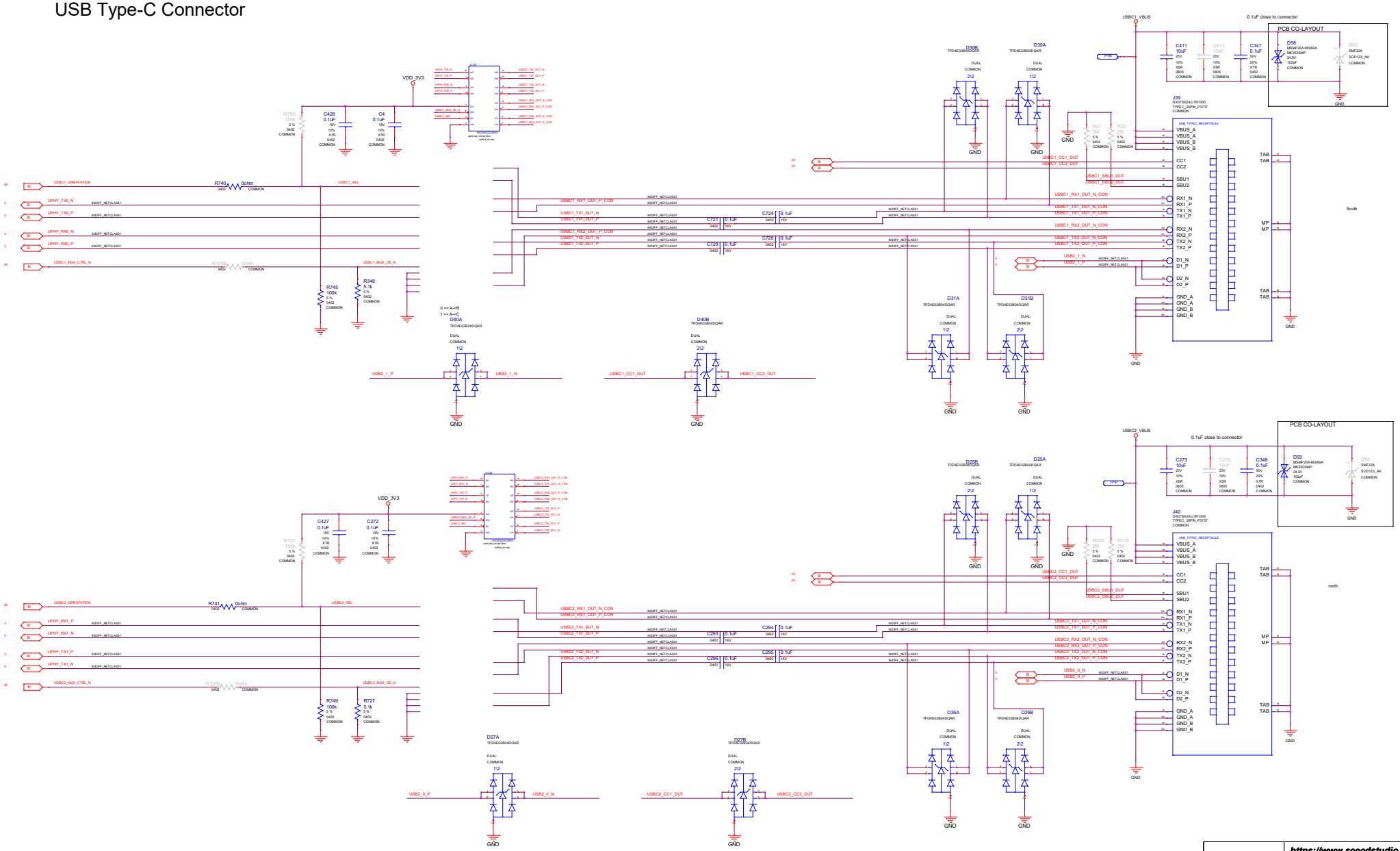

seeed
The IoT Hardware Enabler

https://www.seeedstudio.com

Title: P3737_A05

Size: Custom	Document Number: 0031_USB type-C Connector	Rev: v1.0
Draw By: Seeed	Date: Friday, June 05, 2026	Sheet: 31 of 38

Input Power Source

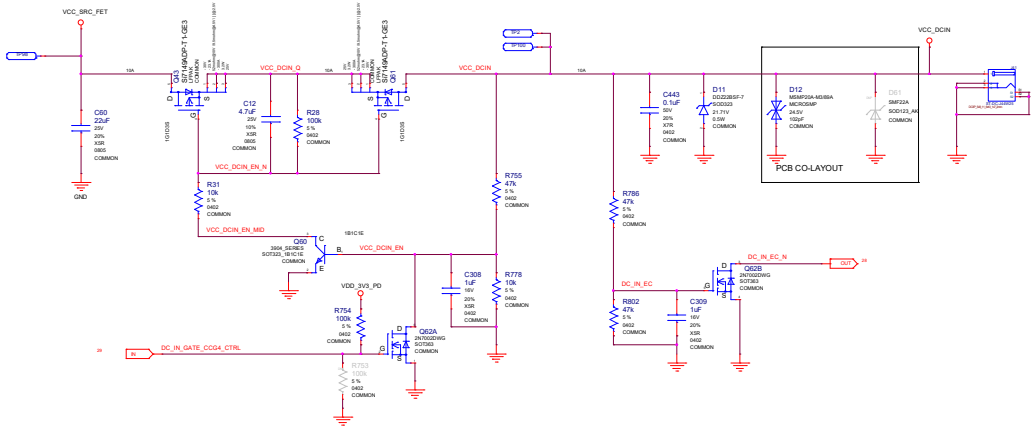

Input control

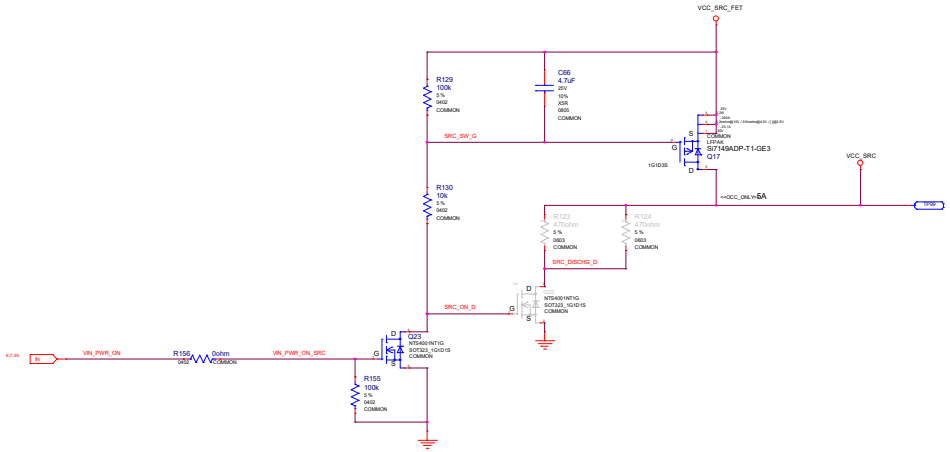

VIN LOSS DETECTION

Vth- = (100k/47k+1)*2.0V = 6.26V
Vth+ = (100k/47k+1)*(2.0+0.1) = 6.56V
Vhys = 0.31V

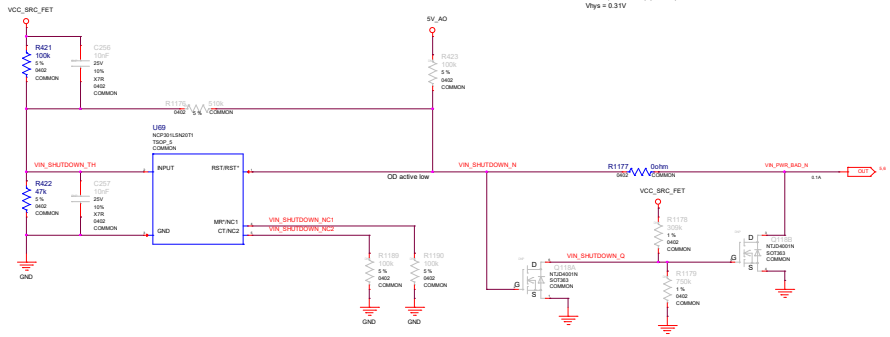

Discharge

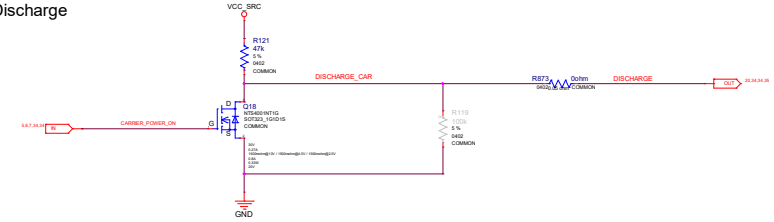

seeed The IoT Hardware Enabler	https://www.seeedstudio.com	
	Title: P3737_A05	
Size: Custom	Document Number: 0032_DC JACK	Rev: v1.0
Draw By: Seeed	Date: Friday, June 05, 2026	Sheet: 32 of 38

0V7

WOL from OFF

Jumper open: disable WOL (default)

Jumper short: enable WOL

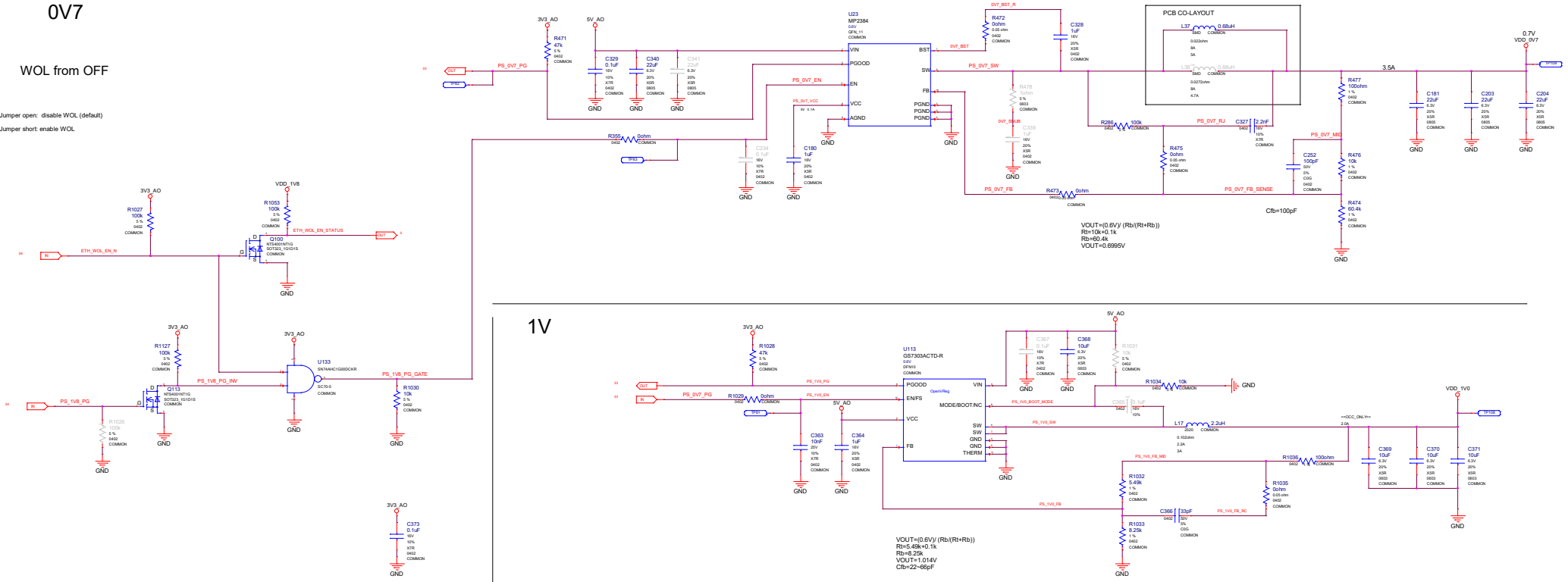

1V

2V

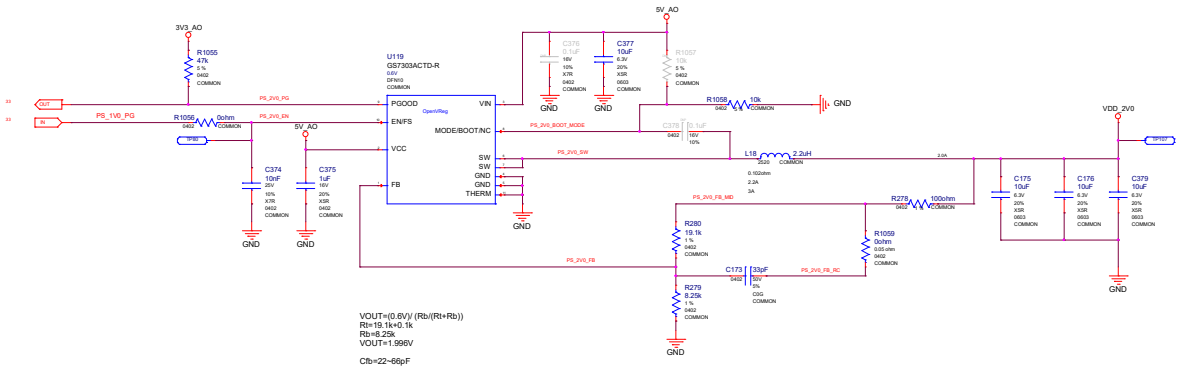

VDDIO_AQR113C

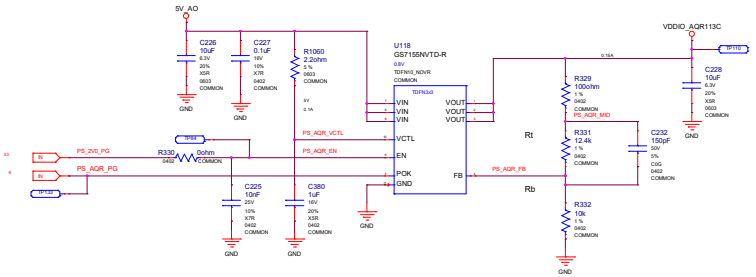

seeed The IoT Hardware Enabler	https://www.seeedstudio.com	
	Title: P3737_A05	
Size: Custom	Document Number: 0033_System Power 0V7 1V0 2V0	Rev: v1.0
Draw By: Seeed	Date: Friday, June 05, 2026	Sheet: 33 of 38

3V3

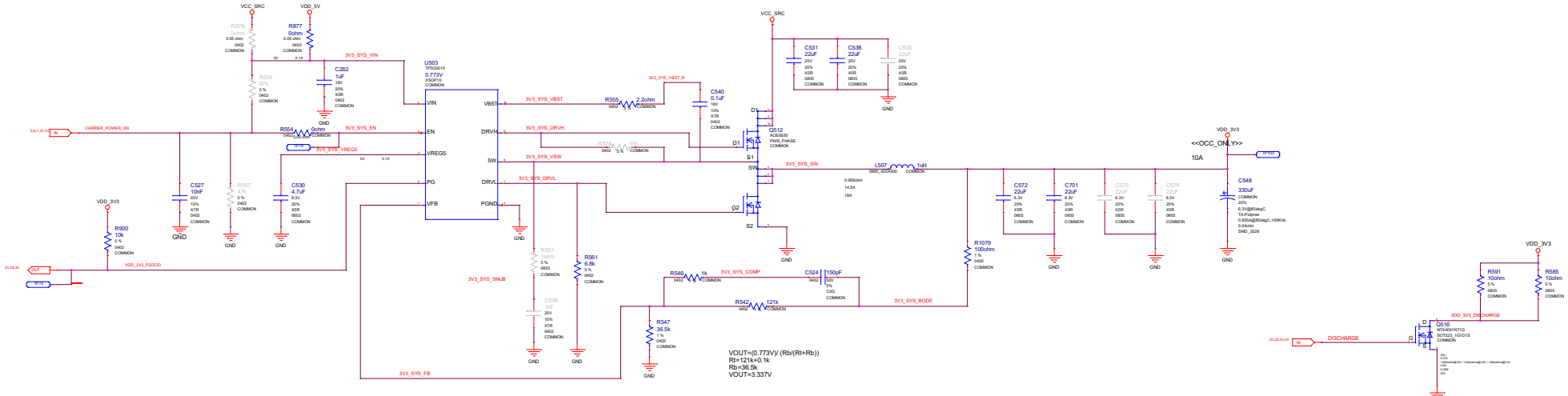

1V8

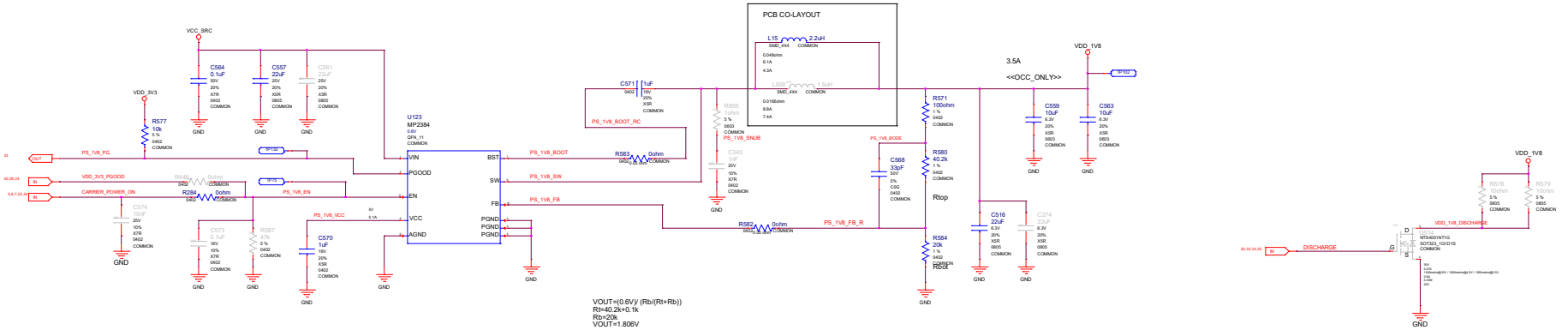

3V3_AO

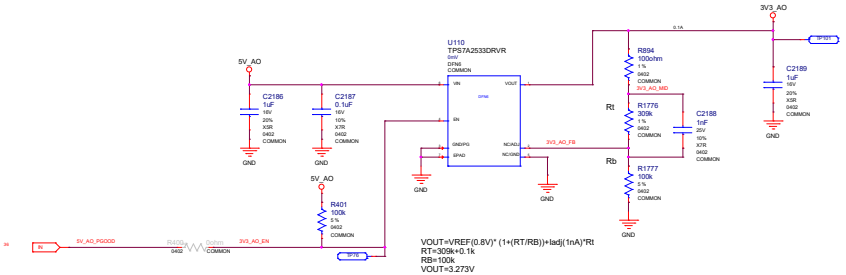

seeed The IoT Hardware Enabler	https://www.seeedstudio.com	
	Title: P3737_A05	
Size: Custom	Document Number: 0034_System Power 1V8 & 3V3	Rev: v1.0
Draw By: Seeed	Date: Friday, June 05, 2026	Sheet: 34 of 38

VDD_12V

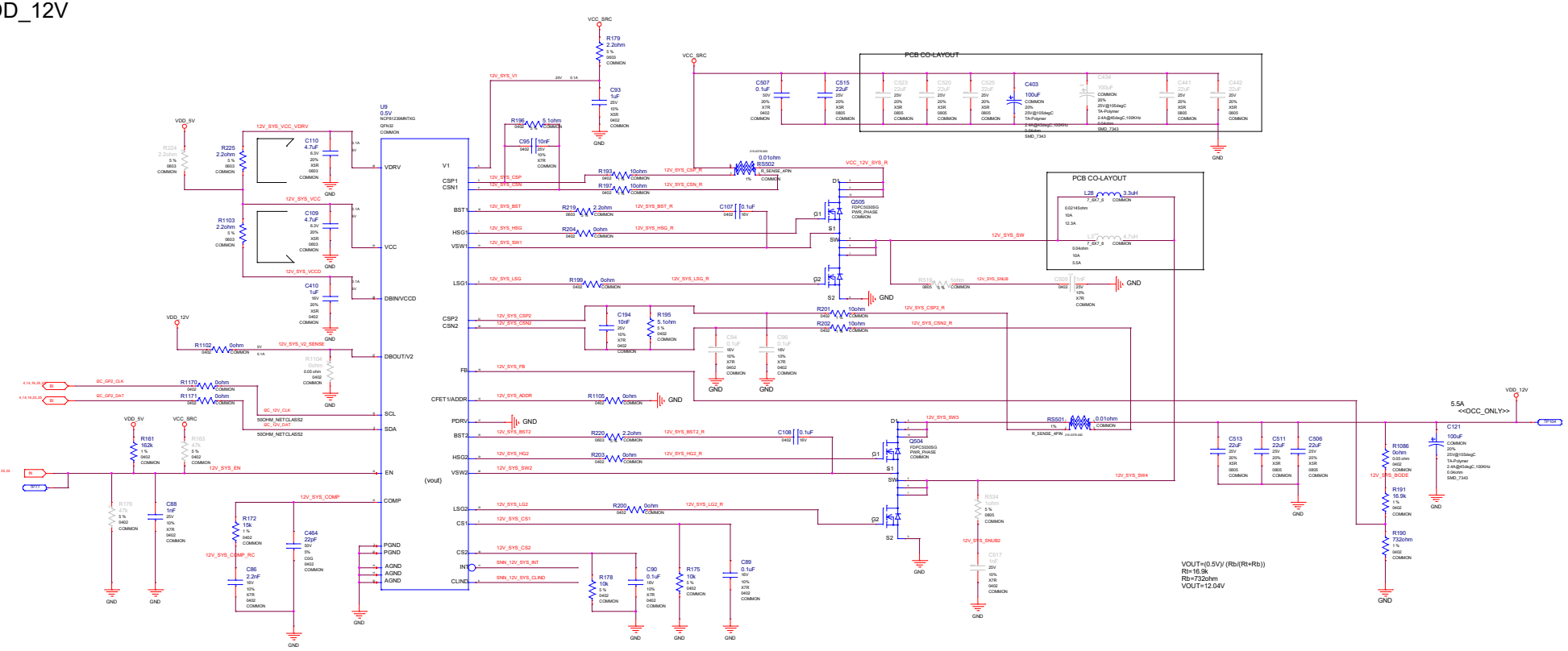

Raddr	I2C address (7bit)	
0ohm	0x74	<-- default
26.1k	0x75	
44.2k	0x76	
71.5k	0x77	

seeed
The IoT Hardware Enabler

https://www.seeedstudio.com

Title: P3737_A05

Size: Custom	Document Number: 0035_System Power 12V	Rev: v1.0
Draw By: Seeed	Date: Friday, June 05, 2026	Sheet: 35 of 38

5V_AO

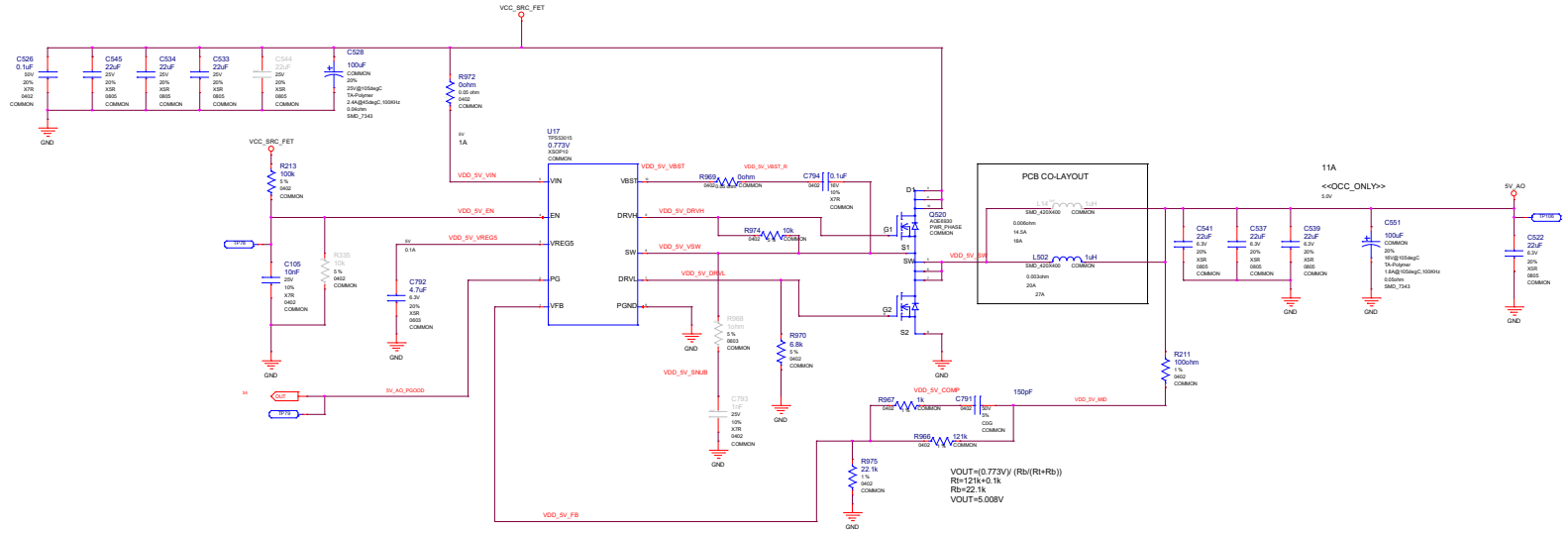

VDD_5V

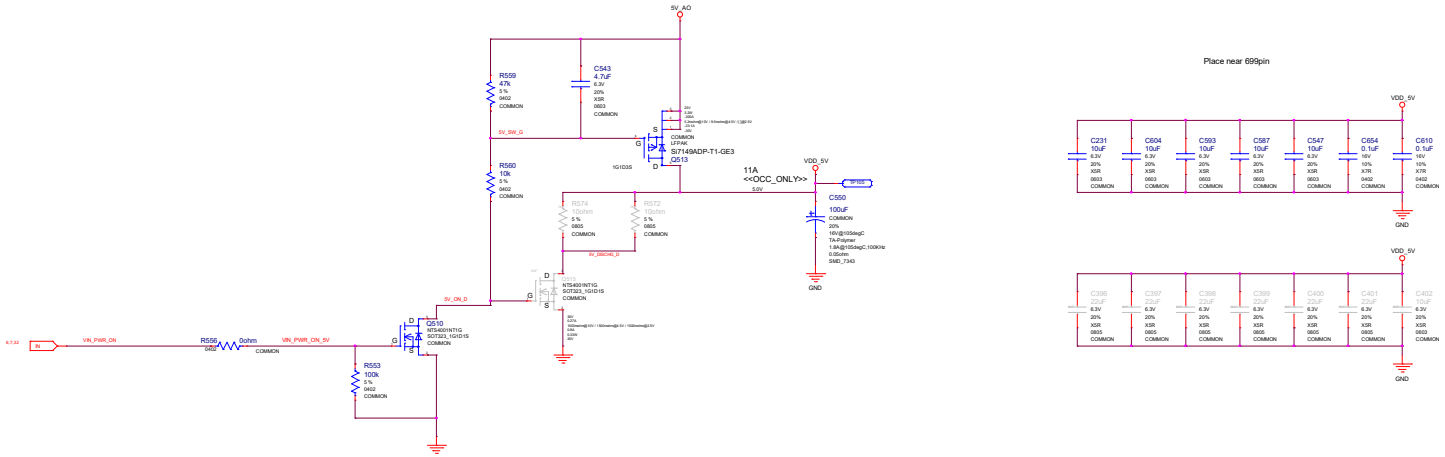

seeed The IoT Hardware Enabler	https://www.seeedstudio.com	
	Title: P3737_A05	
Size: Custom	Document Number: 0036_System Power 5V	Rev: v1.0
Draw By: Seeed	Date: Friday, June 05, 2026	Sheet: 36 of 38

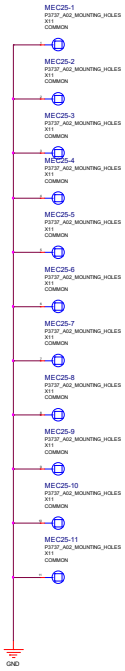

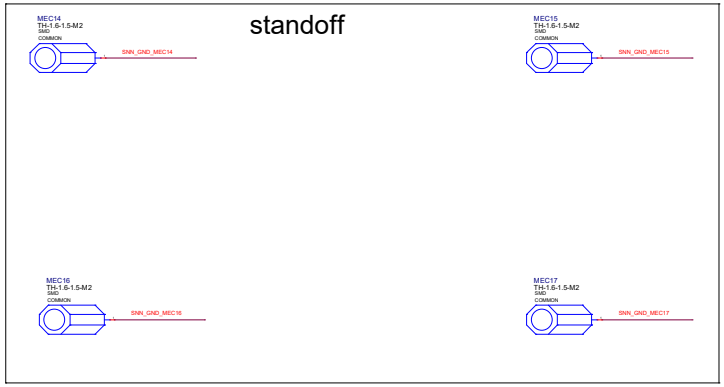

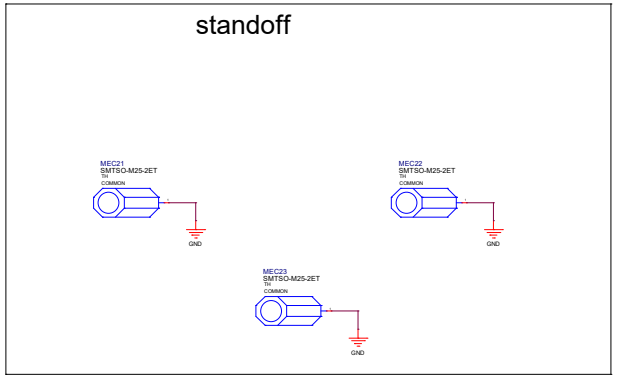

seeed The IoT Hardware Enabler	https://www.seeedstudio.com	
	Title: P3737_A05	
Size: Custom	Document Number: 0037_Mechanical	Rev: v1.0
Draw By: Seeed	Date: Friday, June 05, 2026	Sheet: 37 of 38

seeed The IoT Hardware Enabler	https://www.seeedstudio.com	
	Title: P3737_A05	
Size: Custom	Document Number: 0038_Reserved	Rev: v1.0
Draw By: Seeed	Date: Friday, June 05, 2026	Sheet: 38 of 38