Schematic: reComputer Industrial J201

SHEET	SHEET NAME
01	Table of Contents
02	Block Diagram
03	Power Tree
04	SODIMM Connector 1/3
05	SODIMM Connector 2/3
06	SODIMM Connector 3/3
07	Power In, 5V, 3.3V_MCU
08	3.3V, 1.8V, 1.2V
09	PSE, 1.25V, 1.0V
10	Button MCU For Power Up
11	USB3.1 HUB
12	USB3.1 Type-A x2 (A)
13	USB3.1 Type-A x2 (B)
14	HDMI
15	Type C, Debug UART
16	PCIe Switch Power
17	PCIe Switch IO
18	M.2 KEY-M (NVME)
19	M.2 KEY-B (4G/5G)
20	Mini PCIe (4G/LoRa)
21	Fan, EEPROM, Debug
22	DI, DO
23	CAN, Isolated 5V
24	TPM, IIC to IO
25	RS232/422/485
26	Gigabit Ethernet
27	PCIe to GBE0
28	PCIe to GBE1
29	PCIe to GBE2
30	PCIe to GBE3
31	SATA_Controller
32	SATA_Connector

Revision History

DATE	REVISION	DESCRIPTION
Oct. 3 2023	reServer industrial J401 Carrier Board v1.0	Initial Release.
Oct. 16 2023	reServer industrial J401 Carrier Board v1.1	Correct power input reverse protection issue.
Aug. 6 2024	reServer industrial J401 Carrier Board v1.1	Replace the 32.768k crystal oscillator at OSC2.
Aug. 9 2024	reServer industrial J401 Carrier Board v1.1	Replace the 12M crystal oscillator at X2. Change C73 and C75 for 33pF.

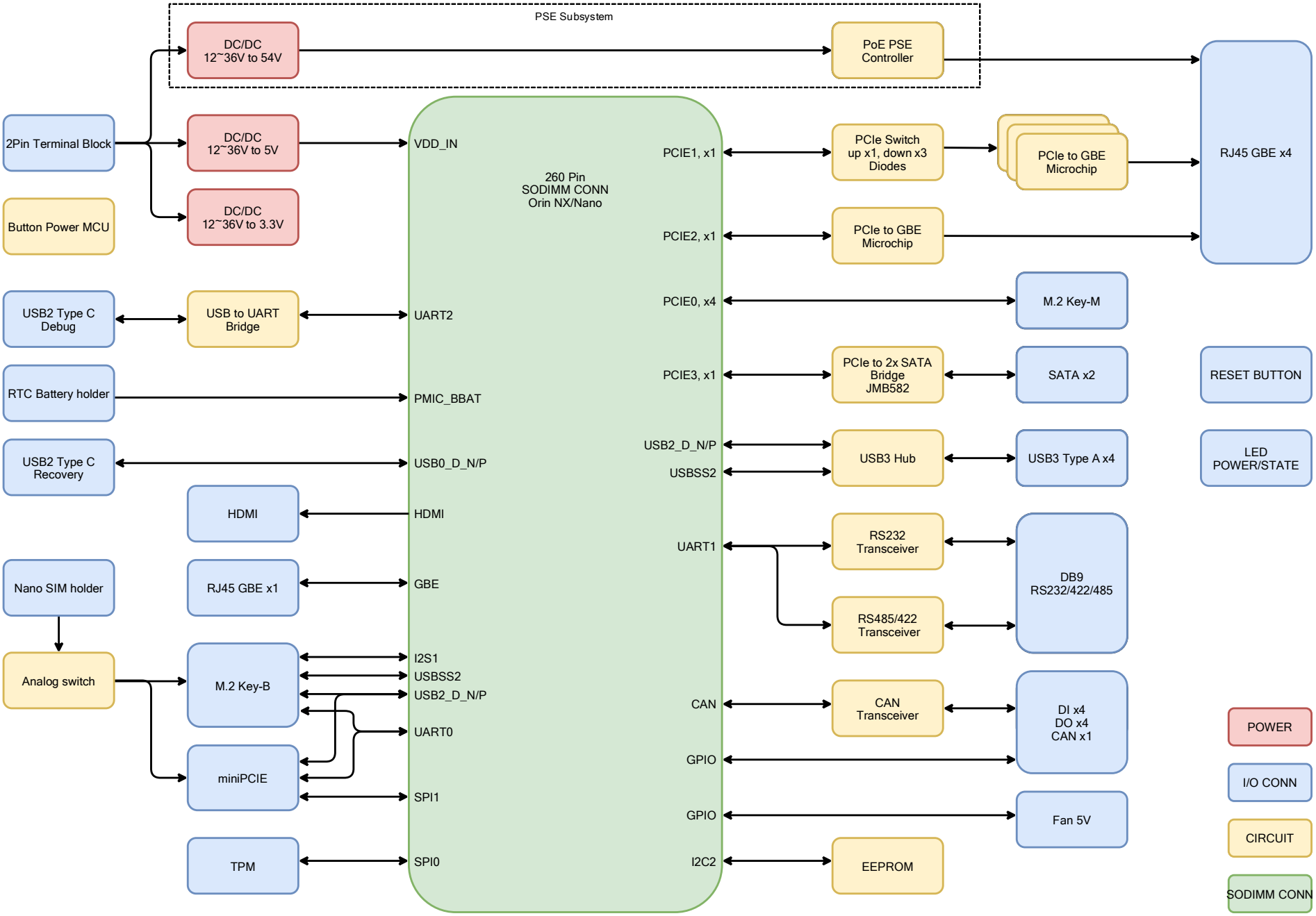

seeed studio	https://www.seeedstudio.com	
	Title: reServer industrial J401	
Size: A3	Document Number: 02 Block Diagram	Rev: v1.1
Draw By: qxn	Date: Wednesday, August 21, 2024	Sheet: 2 of 33

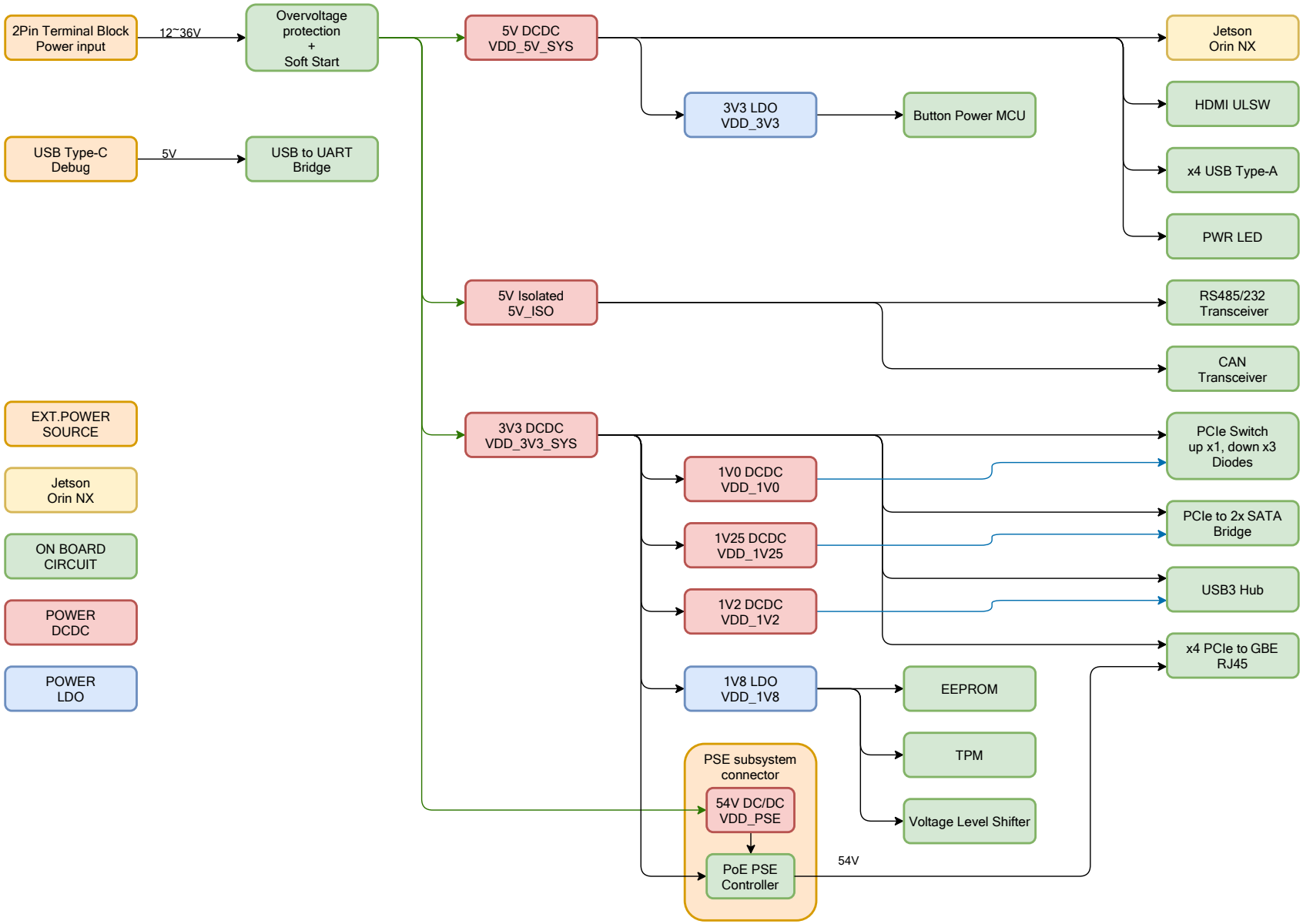

seeed studio	https://www.seeedstudio.com	
	Title: reServer industrial J401	
Size: A3	Document Number: 03 Power Tree	Rev: v1.1
Draw By: qxn	Date: Wednesday, August 21, 2024	Sheet: 3 of 33

UART, I2C, CAN and GPIOs

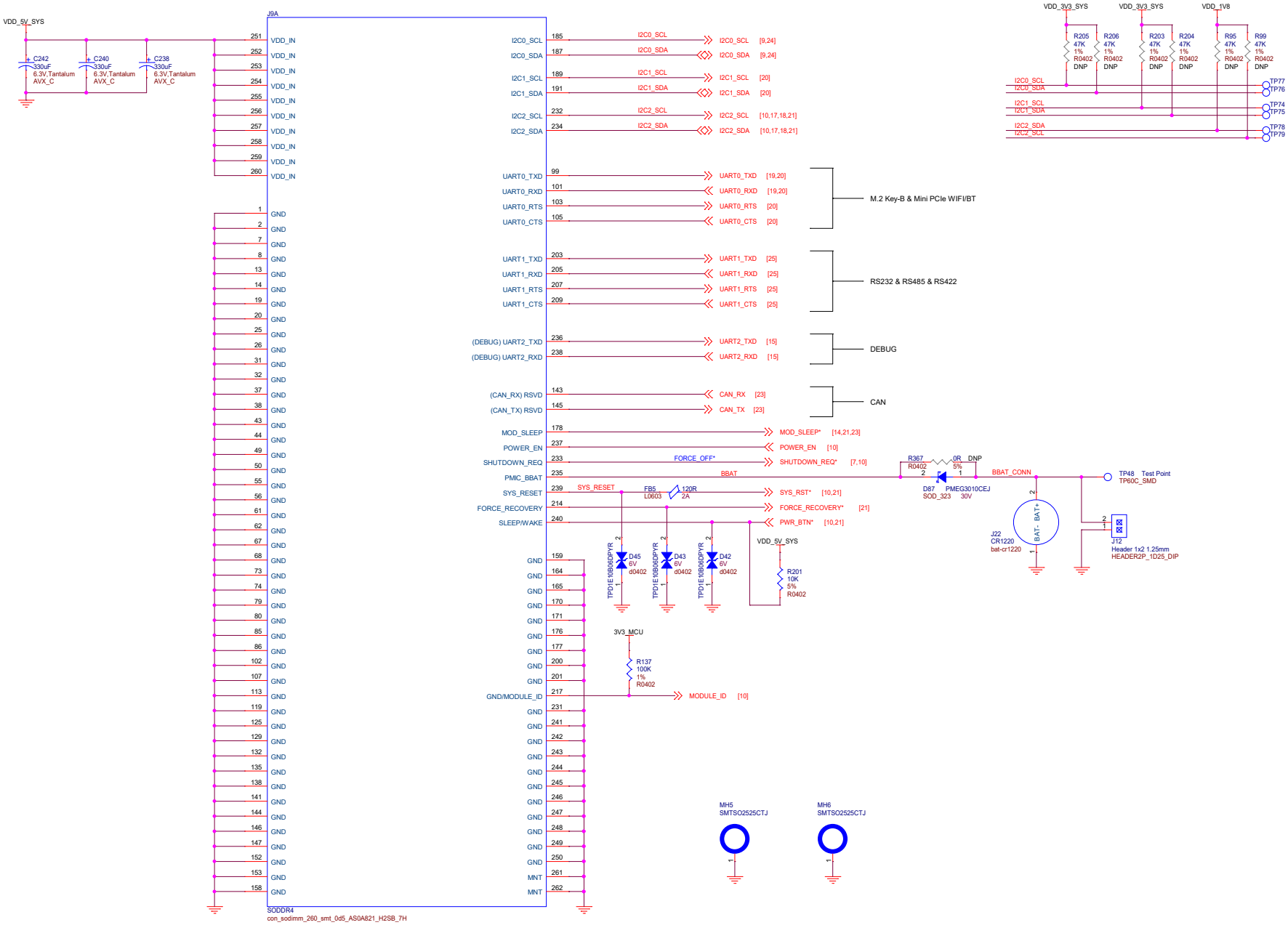

seeed studio	https://www.seeedstudio.com	
	Title: reServer industrial J401	
Size: C	Document Number: 04 SODIMM Connector 1/3	Rev: v1.1
Draw By: qxn	Date: Wednesday, August 21, 2024	Sheet: 4 of 33

GPIOs, USB2.0, I2S, SPI, GBe and CSI

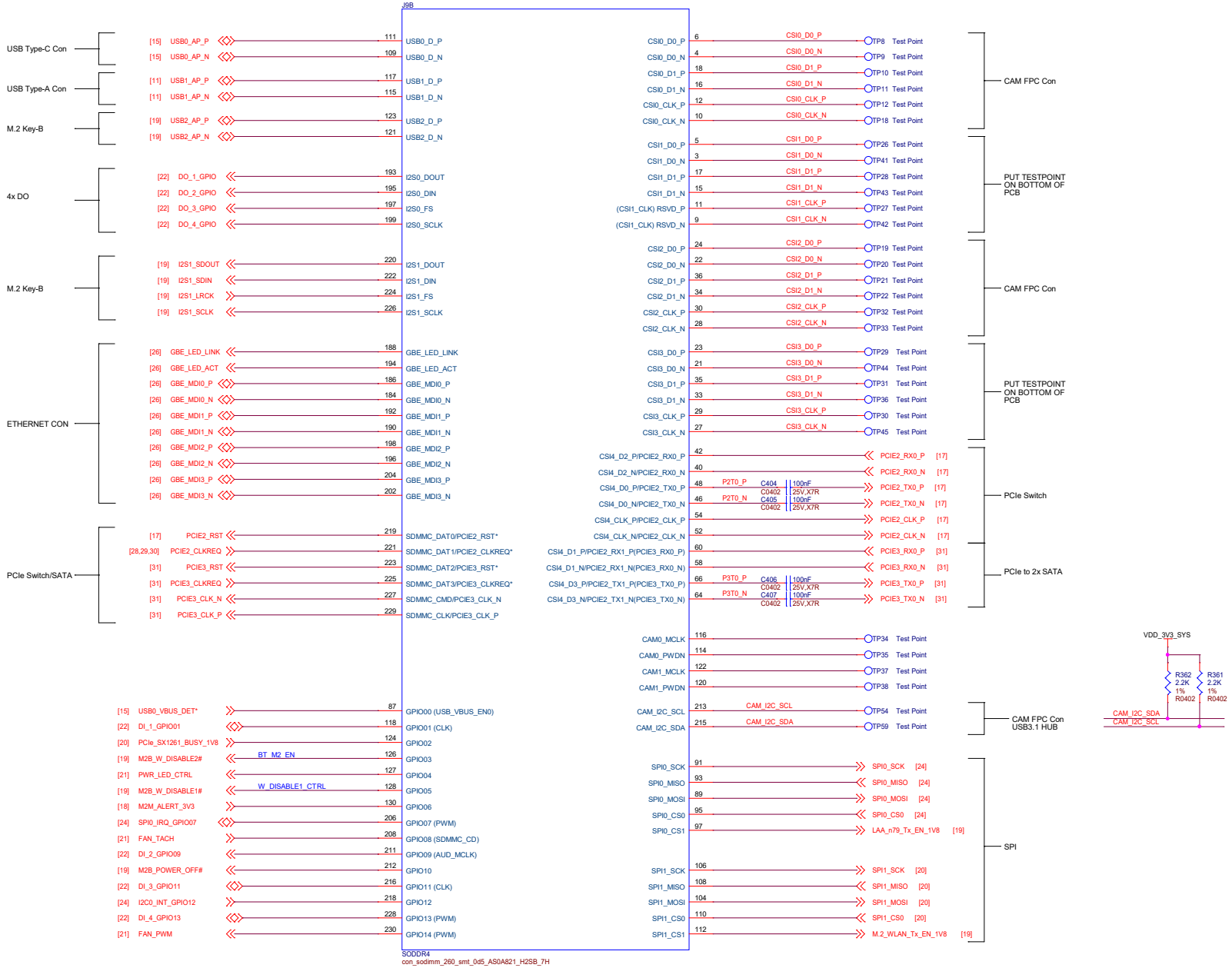

seeed studio

https://www.seeedstudio.com

Title: reServer industrial J401

Size: C	Document Number: 05 SODIMM Connector 2/3	Rev: v1.1
Draw By: qxn	Date: Wednesday, August 21, 2024	Sheet: 5 of 33

HDMI, DP, DSI, USBSS and PCIe

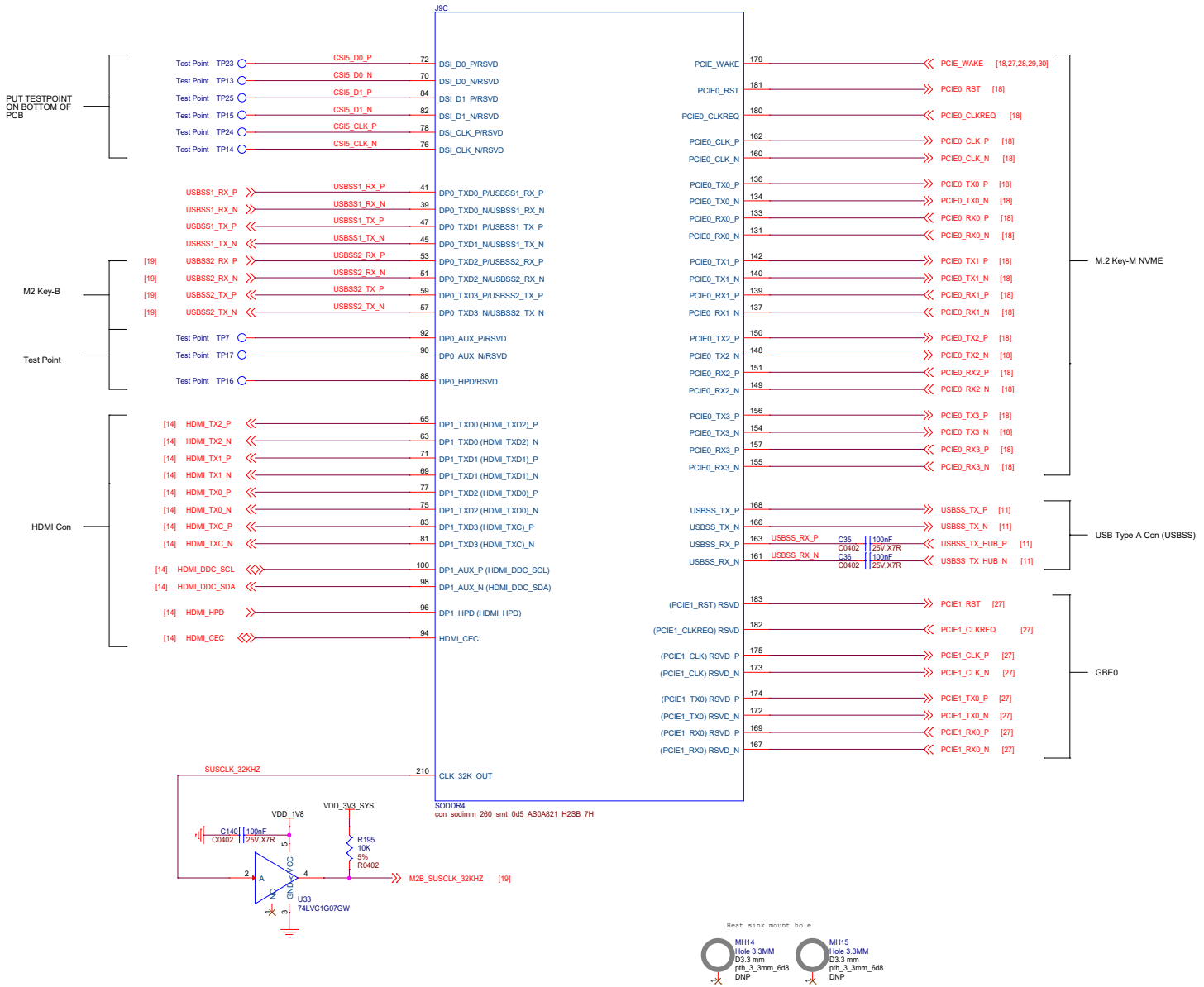

seeed studio	https://www.seeedstudio.com	
	Title: reServer industrial J401	
Size: C	Document Number: 06 SODIMM Connector 3/3	Rev: v1.1
Draw By: qxn	Date: Wednesday, August 21, 2024	Sheet: 6 of 33

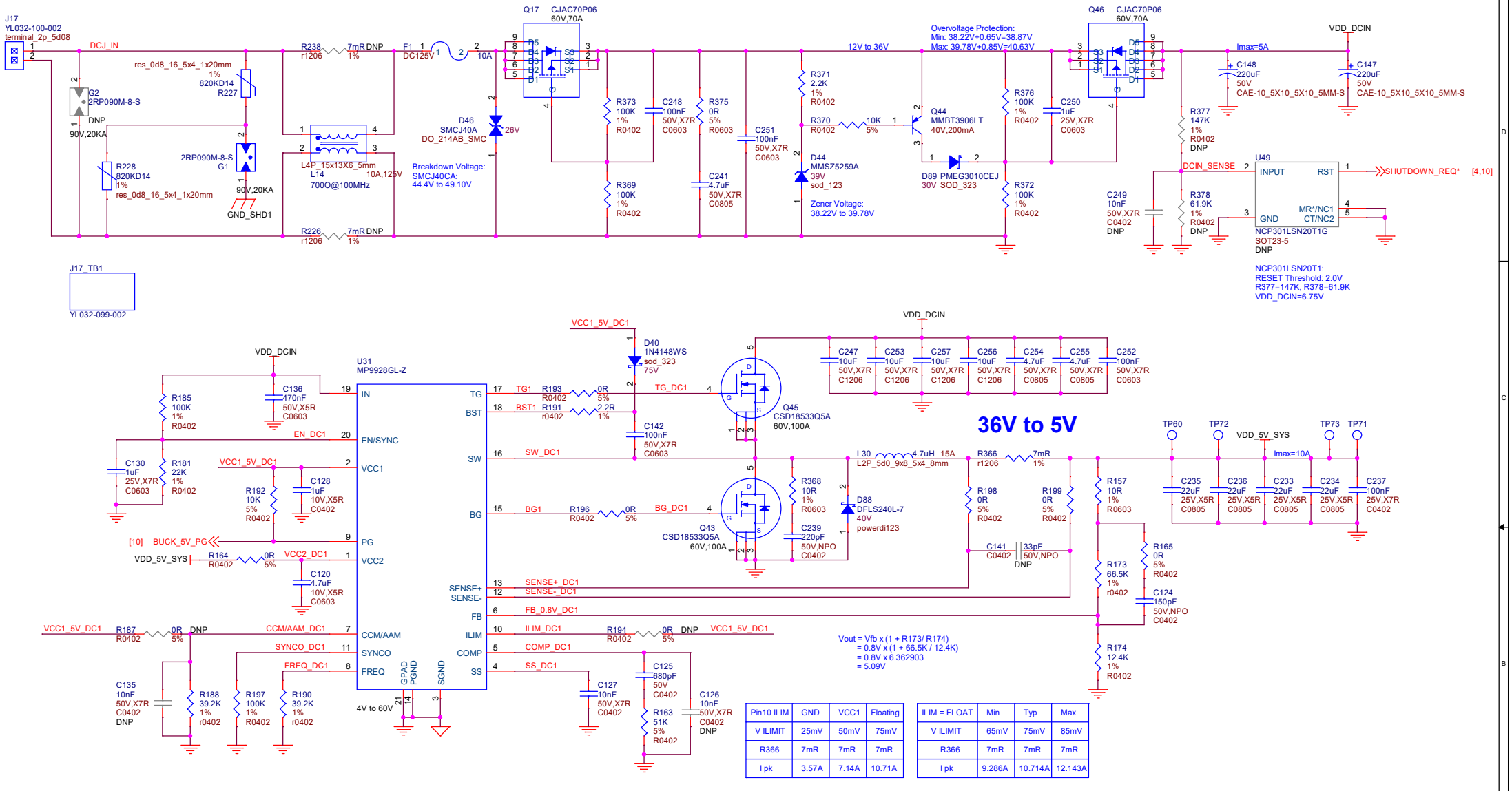

Pin10 ILIM	GND	VCC1	Floating
V ILIMIT	25mV	50mV	75mV
R366	7mR	7mR	7mR
I pk	3.57A	7.14A	10.71A

ILIM = FLOAT	Min	Typ	Max
V ILIMIT	65mV	75mV	85mV
R366	7mR	7mR	7mR
I pk	9.286A	10.714A	12.143A

seeed studio

https://www.seeedstudio.com

Title: reServer industrial J401

Size: A3	Document Number: 07 Power In, 5V, 3.3V_MCU	Rev: v1.1
Draw By: qxn	Date: Wednesday, August 21, 2024	Sheet: 7 of 33

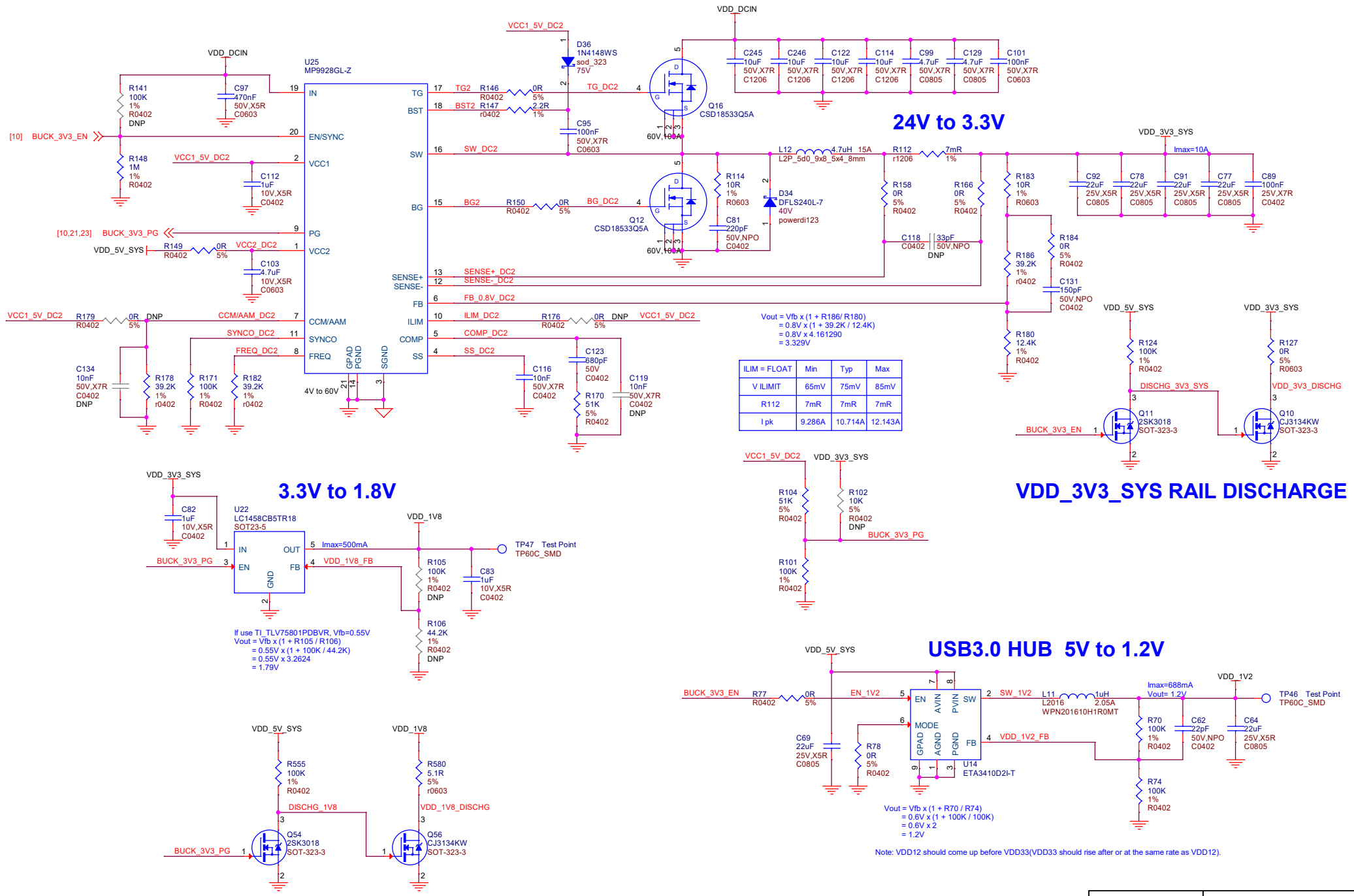

seeed studio

https://www.seeedstudio.com

Title: reServer industrial J401

Size: A3	Document Number: 08 3.3V, 1.8V, 1.2V	Rev: v1.1
Draw By: qxn	Date: Wednesday, August 21, 2024	Sheet: 8 of 33

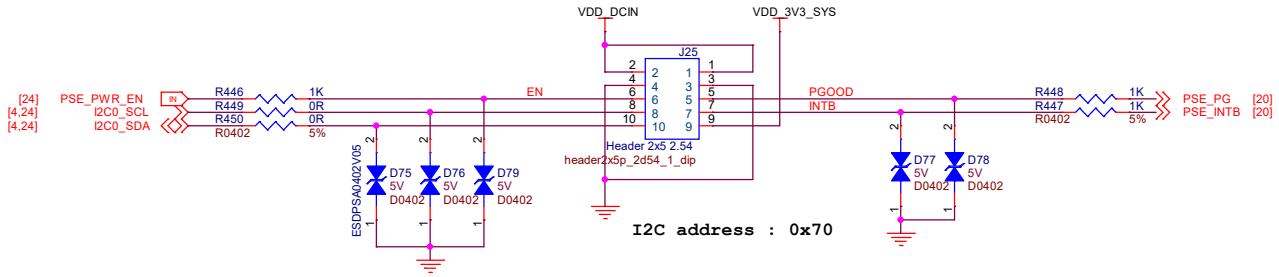

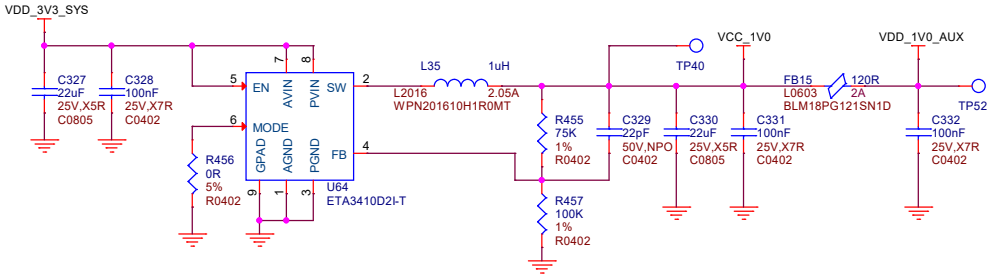

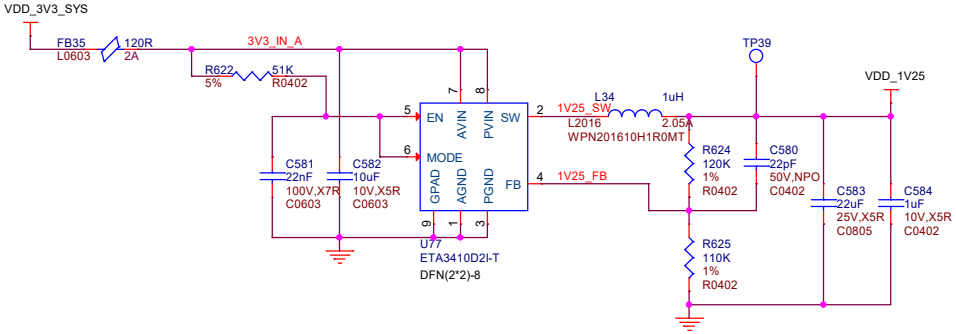

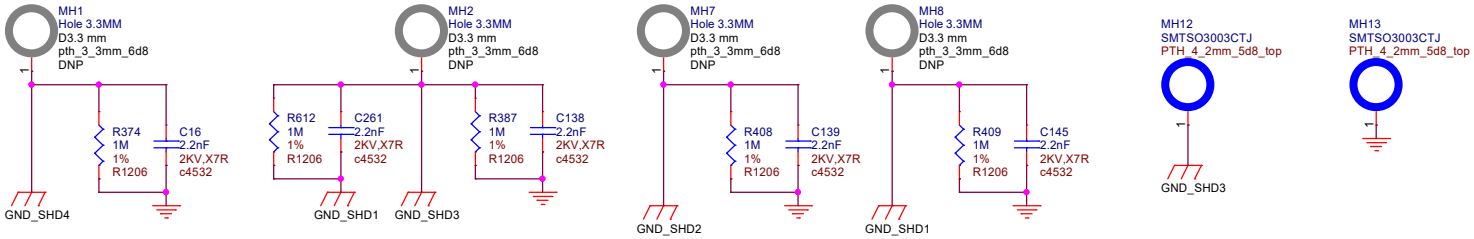

seeed studio	https://www.seeedstudio.com	
	Title: reServer industrial J401	
Size: A3	Document Number: 09 PSE, 1.25V, 1.0V	Rev: v1.1
Draw By: qxn	Date: Wednesday, August 21, 2024	Sheet: 9 of 33

Button MCU For Power Up

MCU

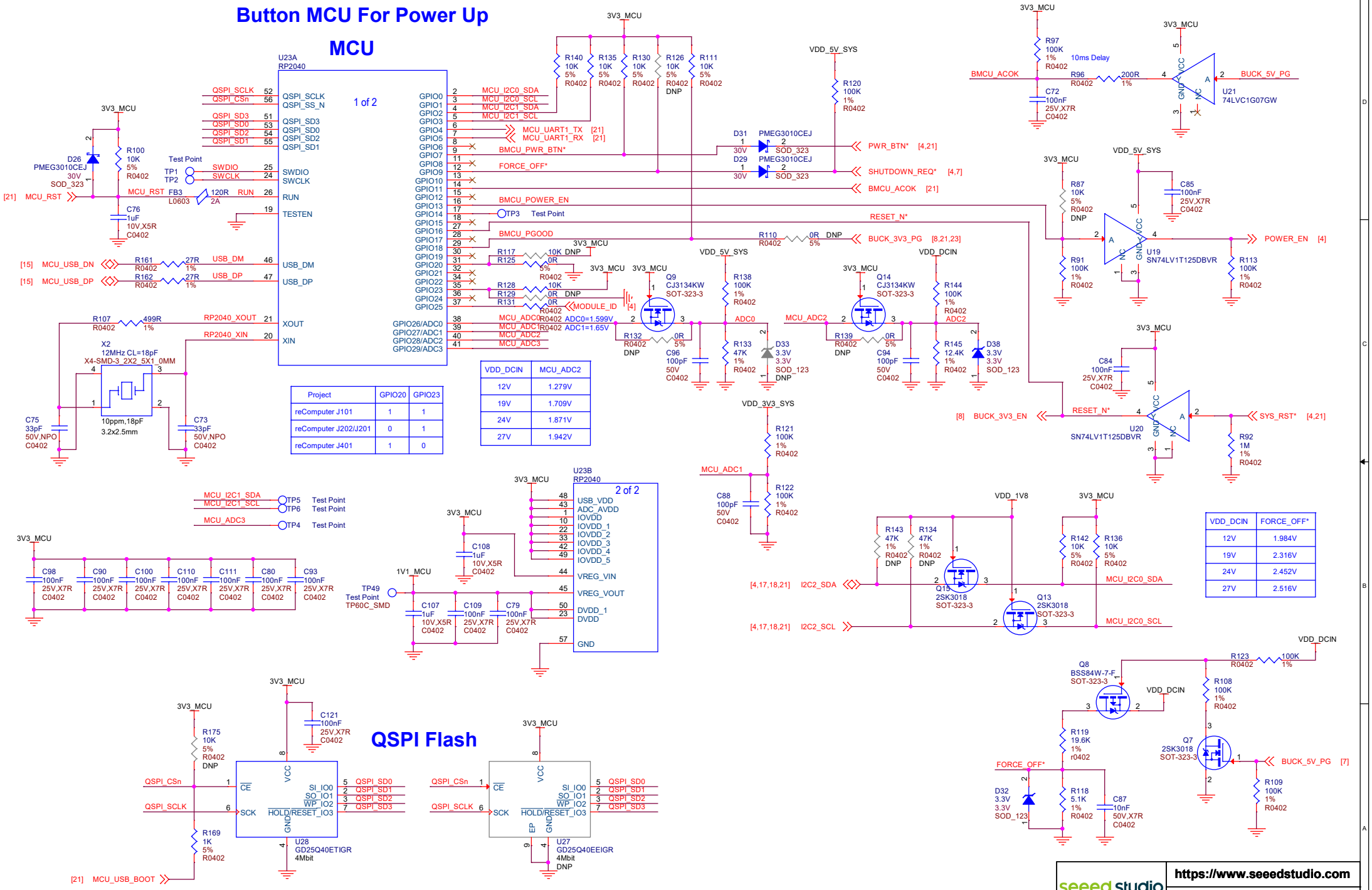

Project	GPIO20	GPIO23
reComputer J101	1	1
reComputer J202/J201	0	1
reComputer J401	1	0

VDD_DCIN	MCU_ADC2
12V	1.279V
19V	1.709V
24V	1.871V
27V	1.942V

VDD_DCIN	FORCE_OFF*
12V	1.984V
19V	2.316V
24V	2.452V
27V	2.516V

seeed studio

https://www.seeedstudio.com

Title: reServer industrial J401

Size: A3	Document Number: 10 Button MCU For Power Up	Rev: v1.1
Draw By: qxn	Date: Wednesday, August 21, 2024	Sheet: 10 of 33

USB3.1 GEN1 HUB x4 PORTS

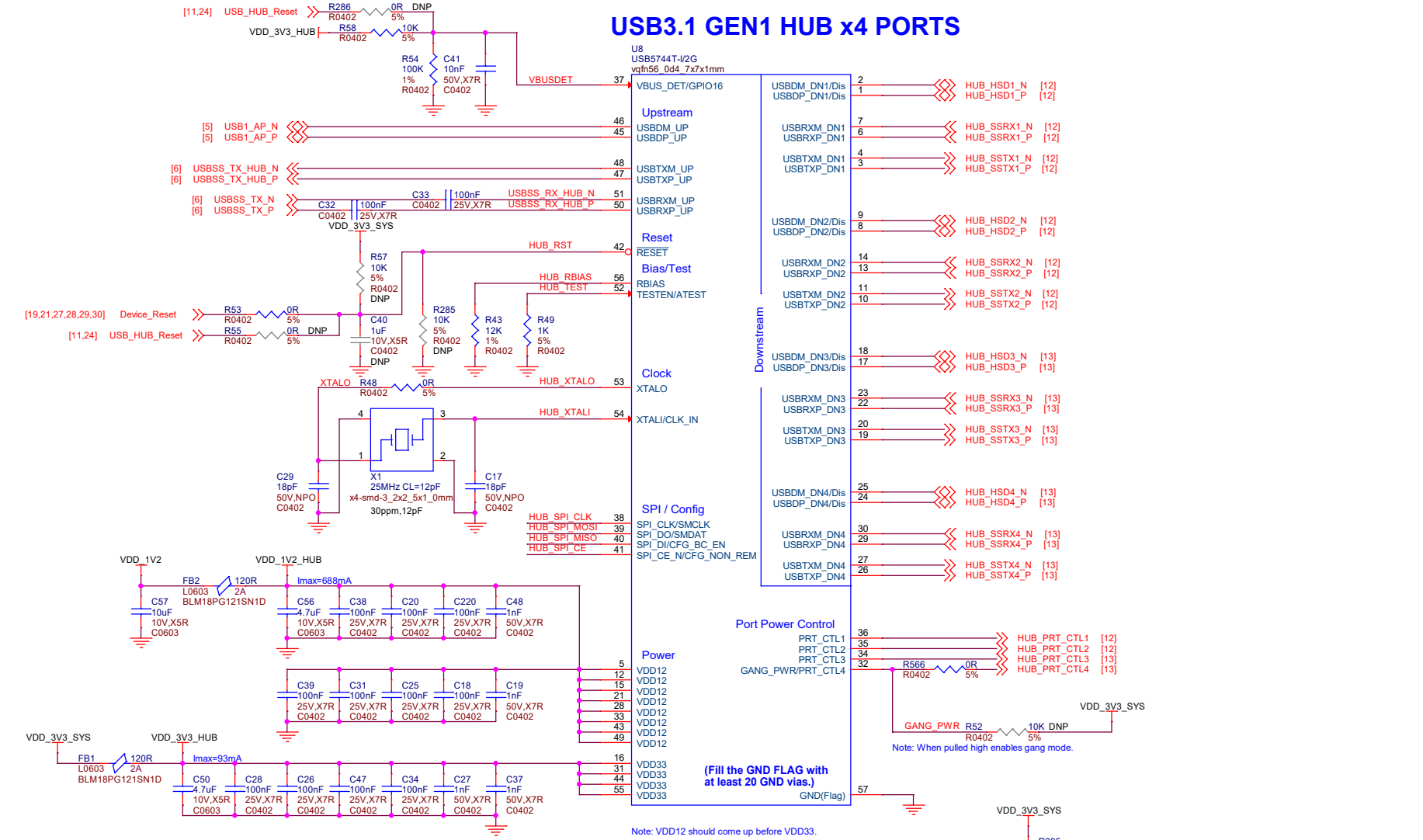

QSPI Flash

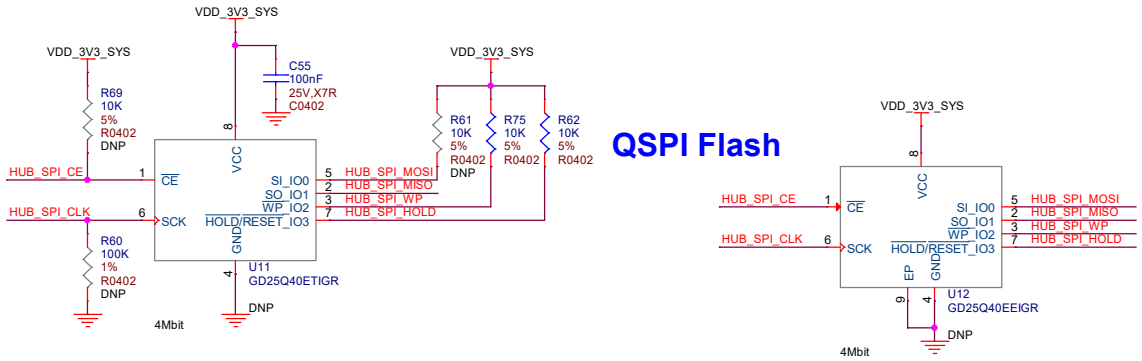

seeed studio

https://www.seeedstudio.com

Title: reServer industrial J401

Size: A3	Document Number: 11 USB3.1 HUB	Rev: v1.1
Draw By: qxn	Date: Wednesday, August 21, 2024	Sheet: 11 of 33

USB3.1 TYPE-A x2 (A)

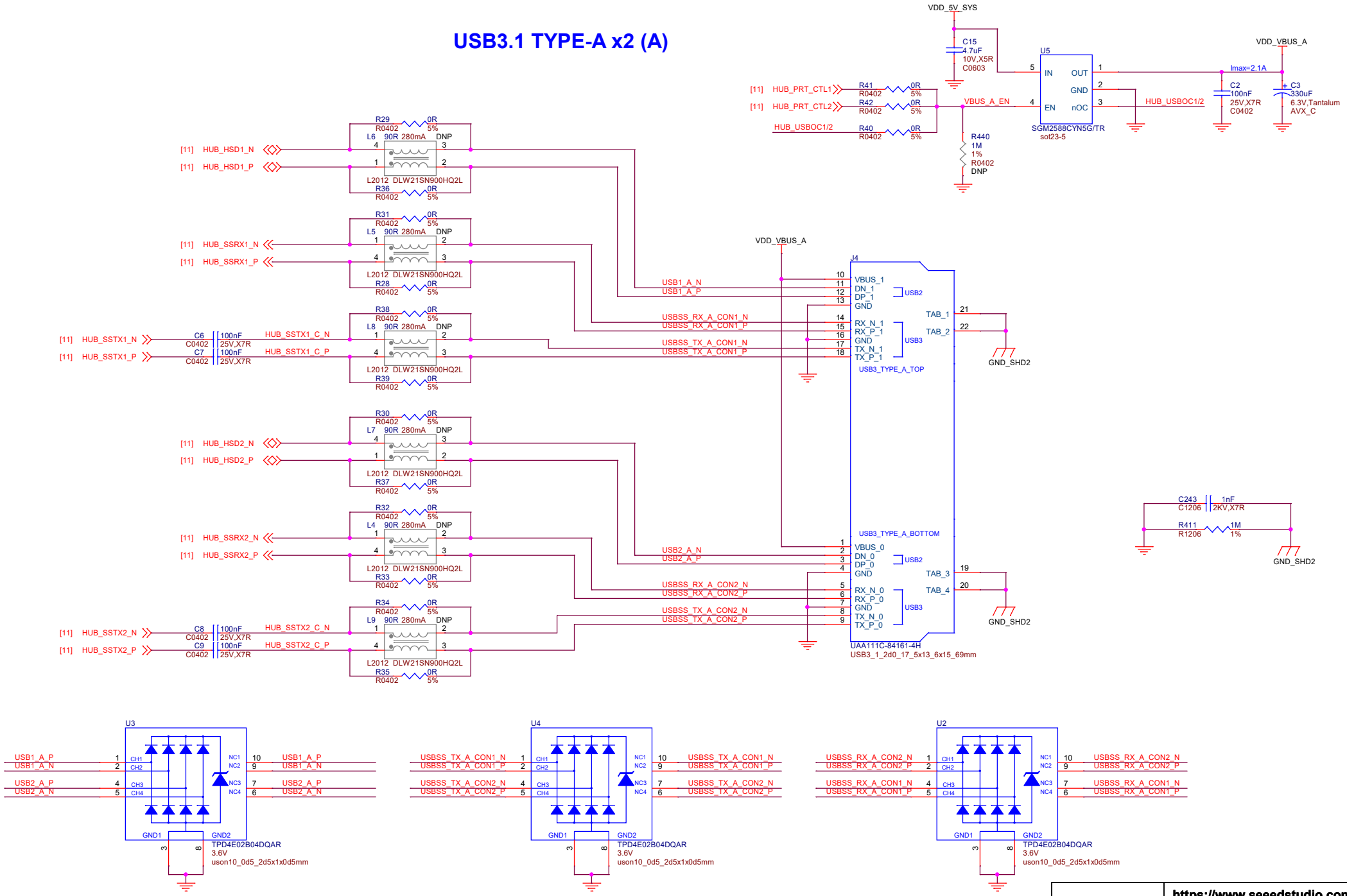

seeed studio

https://www.seeedstudio.com

Title: reServer industrial J401

Size: A3	Document Number: 12 USB3.1 Type-A x2 (A)	Rev: v1.1
Draw By: qxn	Date: Wednesday, August 21, 2024	Sheet: 12 of 33

USB3.1 TYPE-A x2 (B)

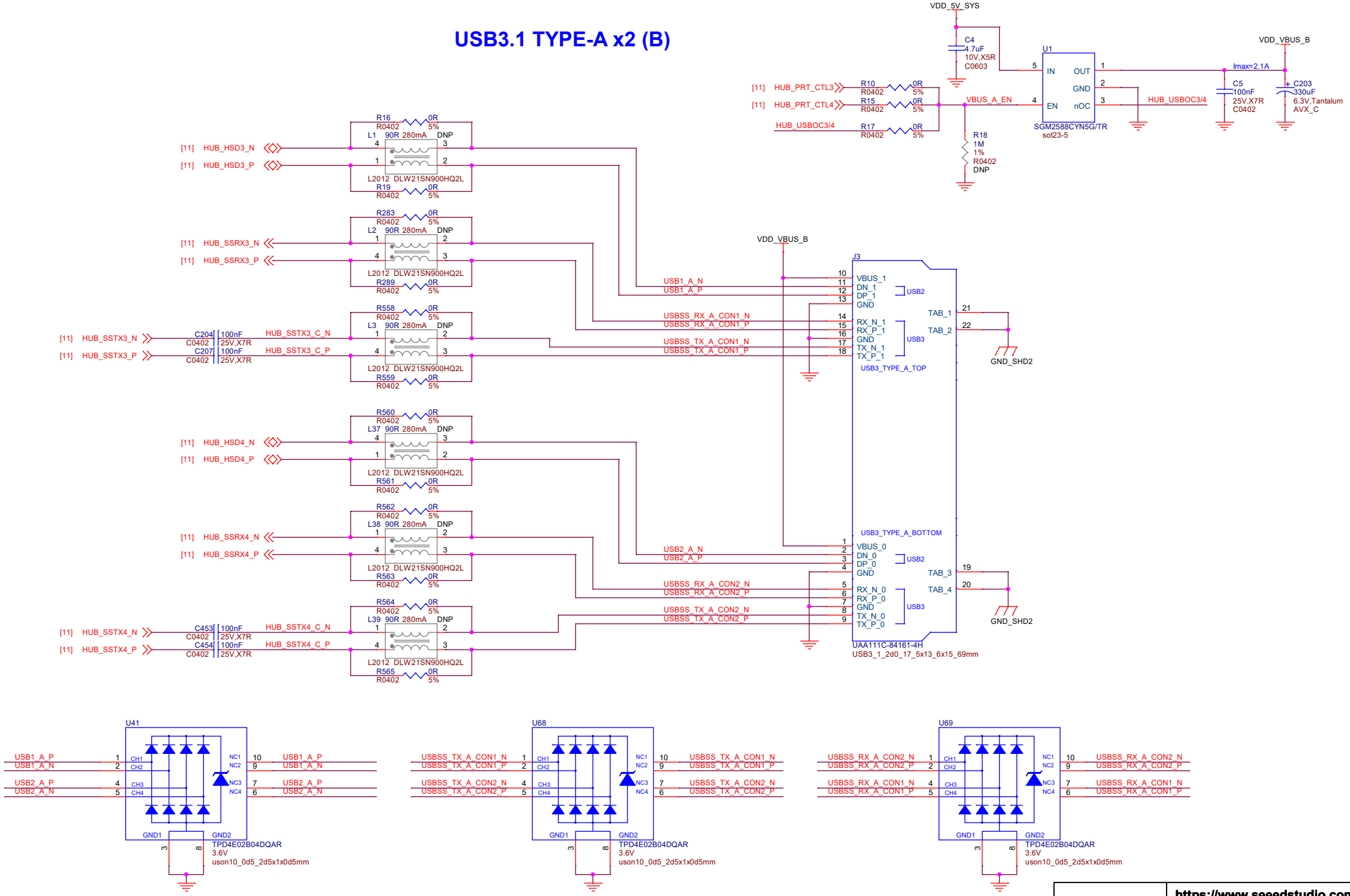

seeed studio	https://www.seeedstudio.com	
	Title: reServer industrial J401	
Size: A3	Document Number: 13 USB3.1 Type-A x2 (B)	Rev: v1.1
Draw By: qxn	Date: Wednesday, August 21, 2024	Sheet: 13 of 33

HDMI Connector

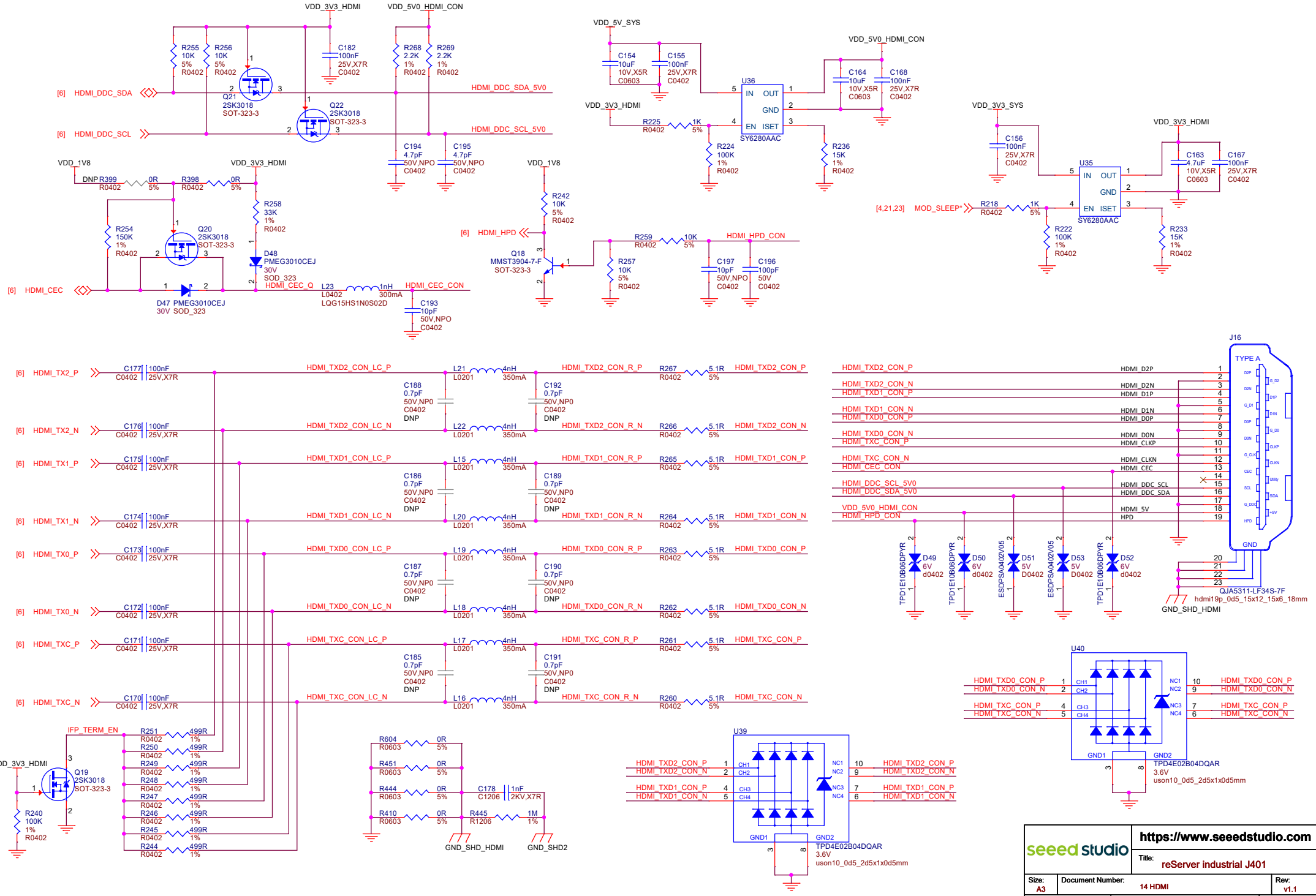

seeed studio

https://www.seeedstudio.com

Title: reServer industrial J401

Size: A3	Document Number: 14 HDMI	Rev: v1.1
Draw By: qxn	Date: Wednesday, August 21, 2024	Sheet: 14 of 33

USB Type C For NX
USB2.0 Only

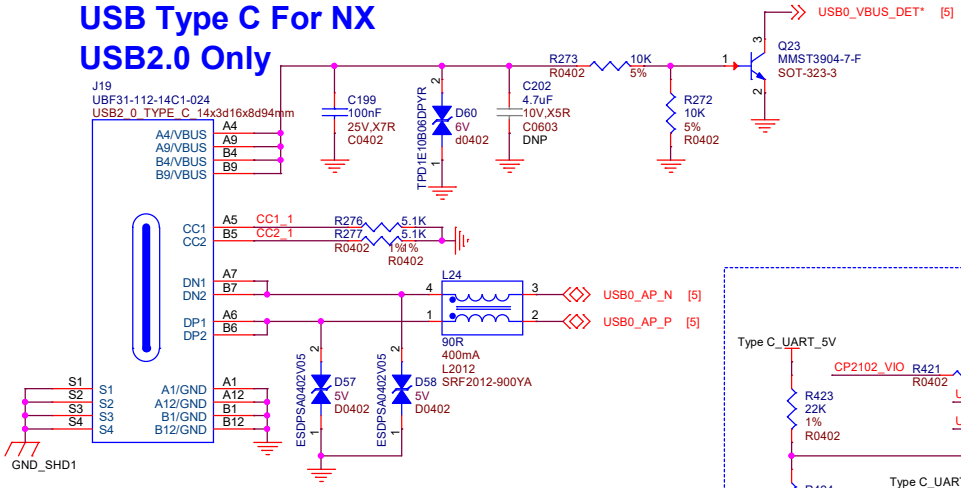

Option 1: CP2102N

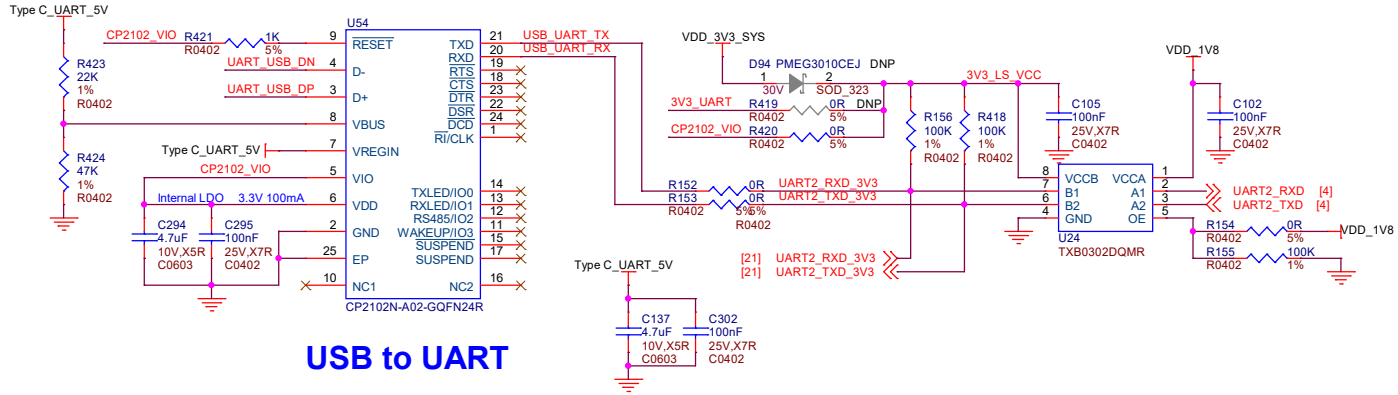

USB to UART

USB Type C For Debug UART & RP2040
USB2.0 Only

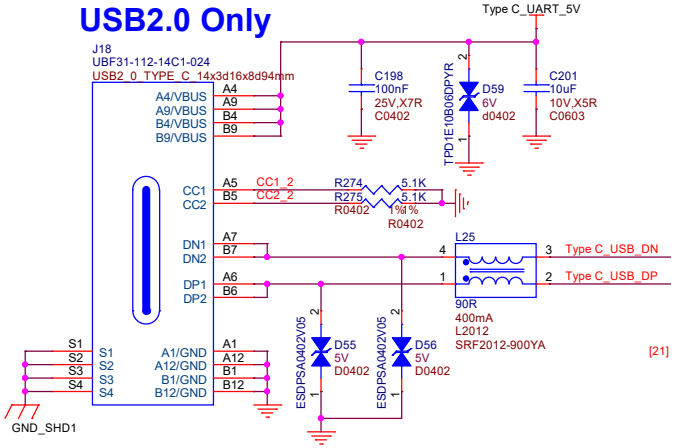

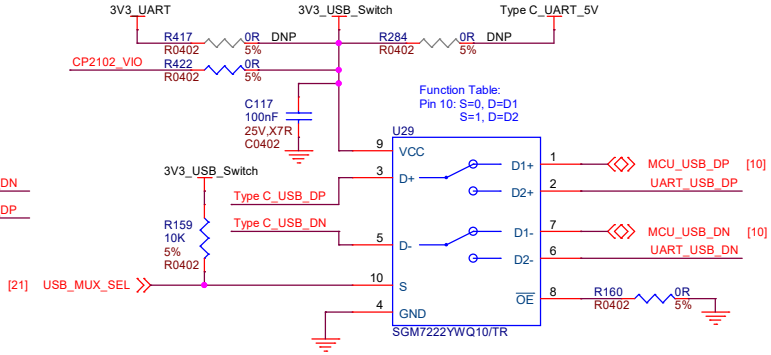

seeed studio	https://www.seeedstudio.com	
	Title: reServer industrial J401	
Size: A3	Document Number: 15 Type C, Debug UART	Rev: v1.1
Draw By: qxn	Date: Wednesday, August 21, 2024	Sheet: 15 of 33

PCIe switch power

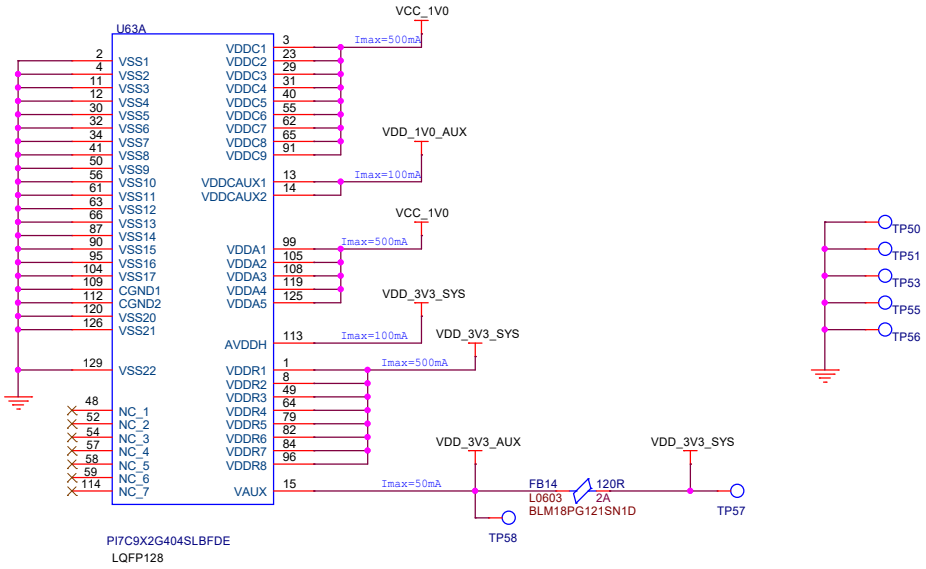

1.0V Decoupling Capacitors

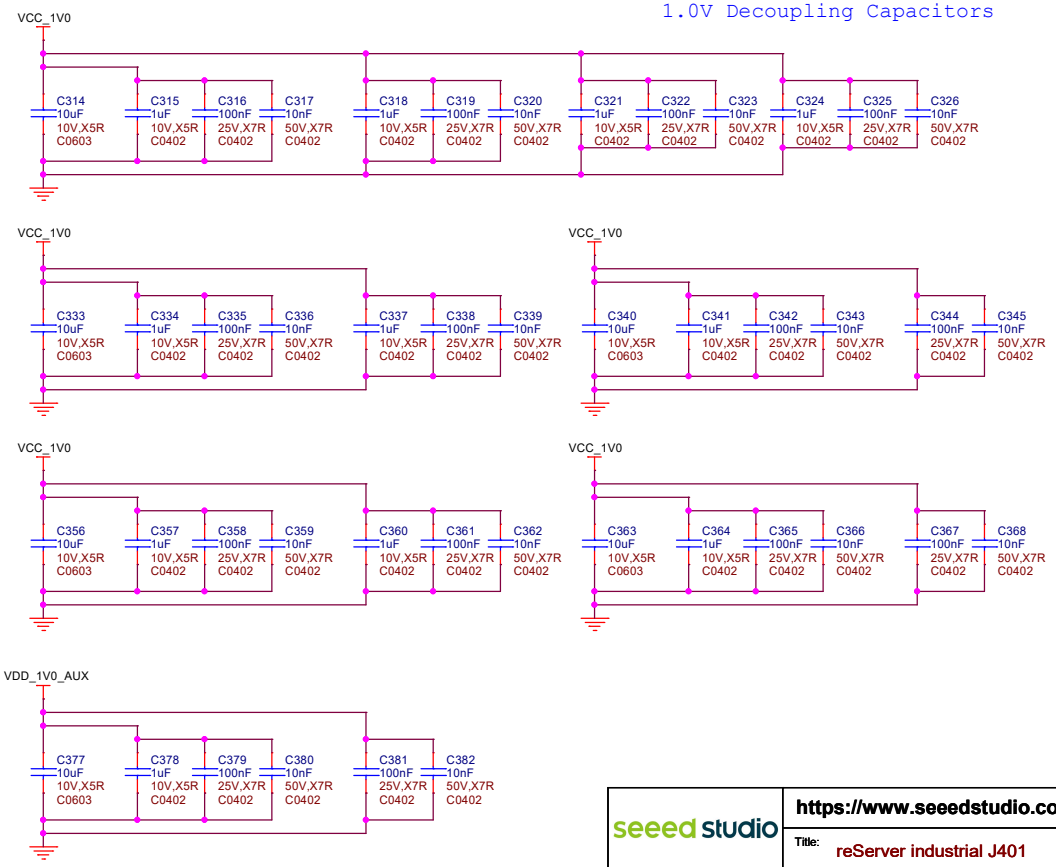

3.3V Decoupling Capacitors

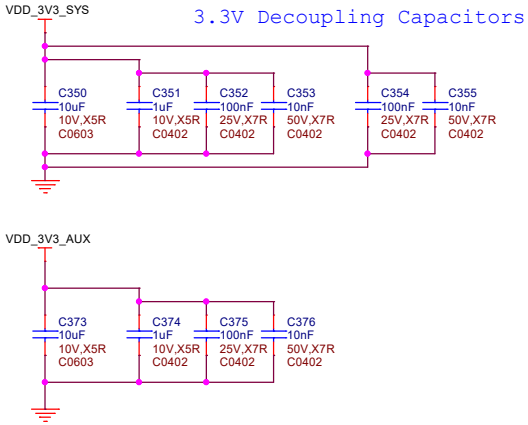

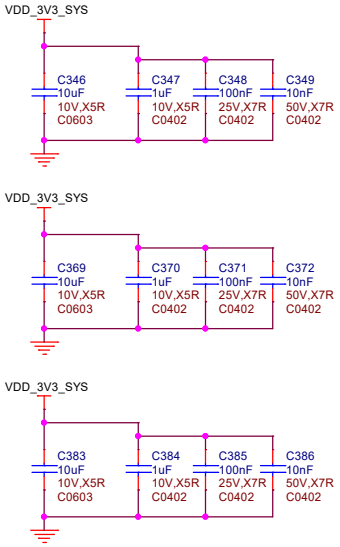

seeed studio	https://www.seeedstudio.com	
	Title: reServer industrial J401	
Size: A3	Document Number: 16 PCIe Switch Power	Rev: v1.1
Draw By: qxn	Date: Wednesday, August 21, 2024	Sheet: 16 of 33

PCIe switch IO

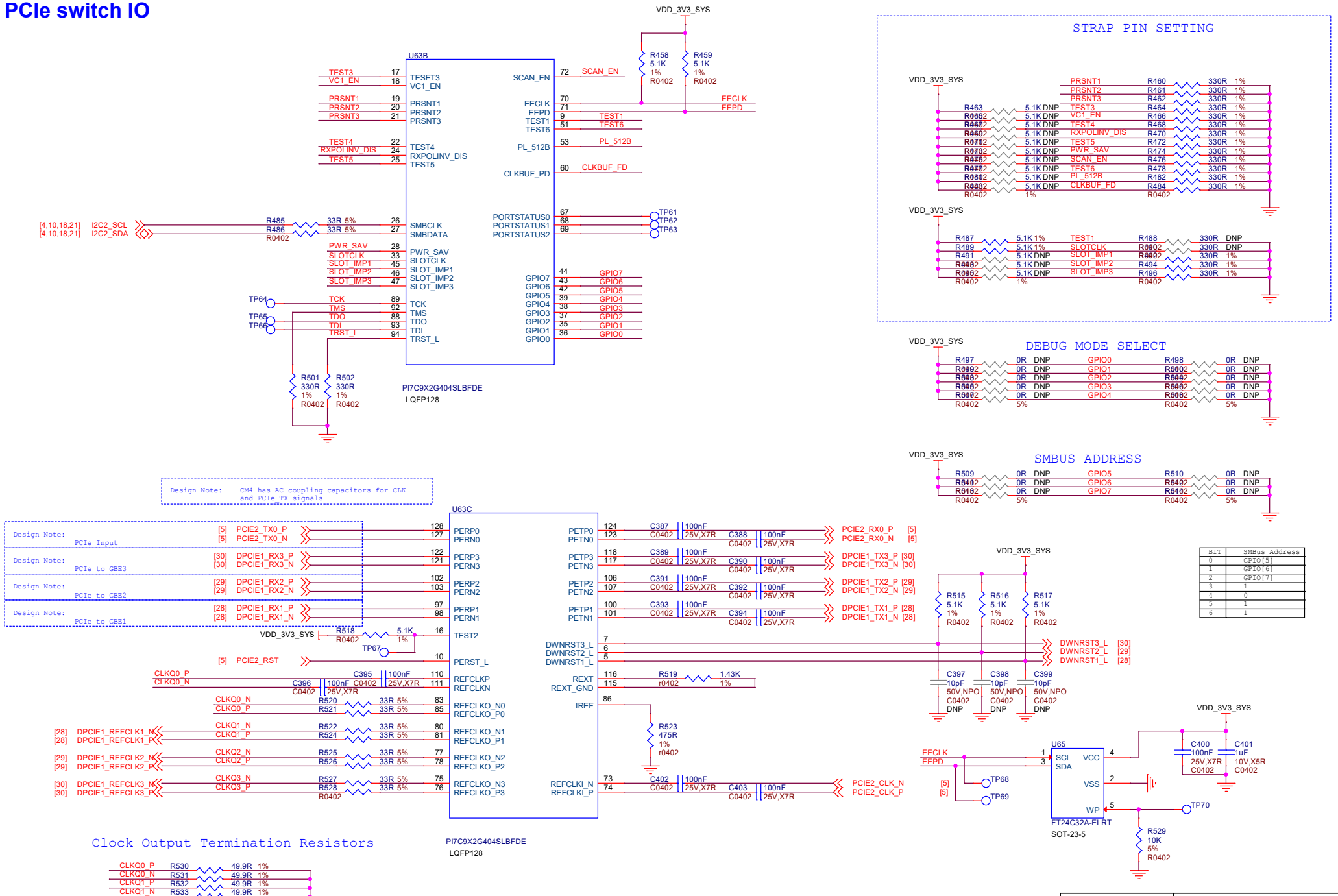

BIT	SMBus Address
0	GPIO[5]
1	GPIO[6]
2	GPIO[7]
3	1
4	0
5	1
6	1

seeed studio

https://www.seeedstudio.com

Title: reServer industrial J401

Size: A3	Document Number: 17 PCIe Switch IO	Rev: v1.1
Draw By: qxn	Date: Wednesday, August 21, 2024	Sheet: 17 of 33

M.2 KEY-M (NVME)

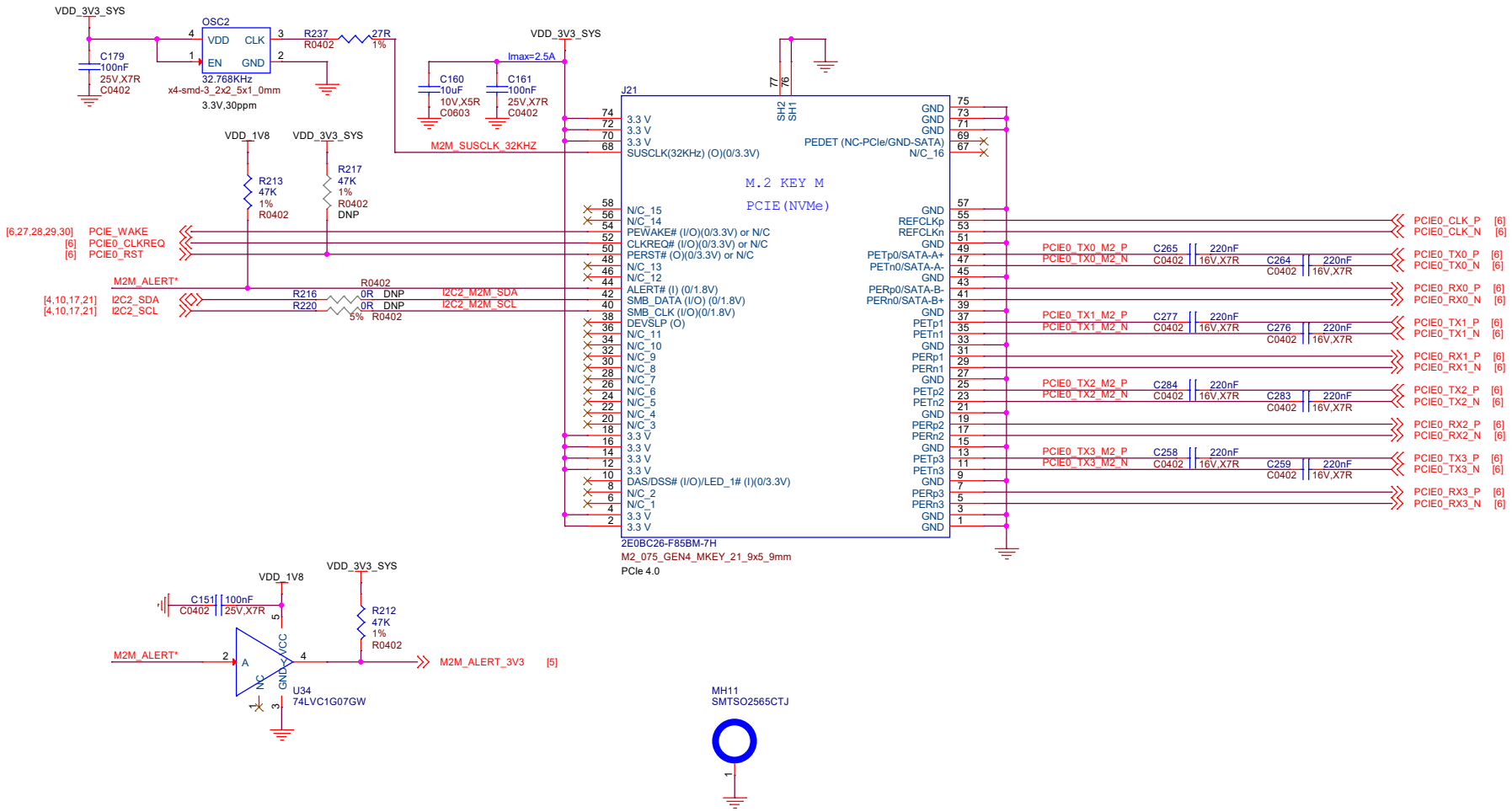

seeed studio	https://www.seeedstudio.com	
	Title: reServer industrial J401	
Size: A3	Document Number: 18 M.2 KEY-M (NVME)	Rev: v1.1
Draw By: qxn	Date: Wednesday, August 21, 2024	Sheet: 18 of 33

M.2 KEY-B (4G/5G)

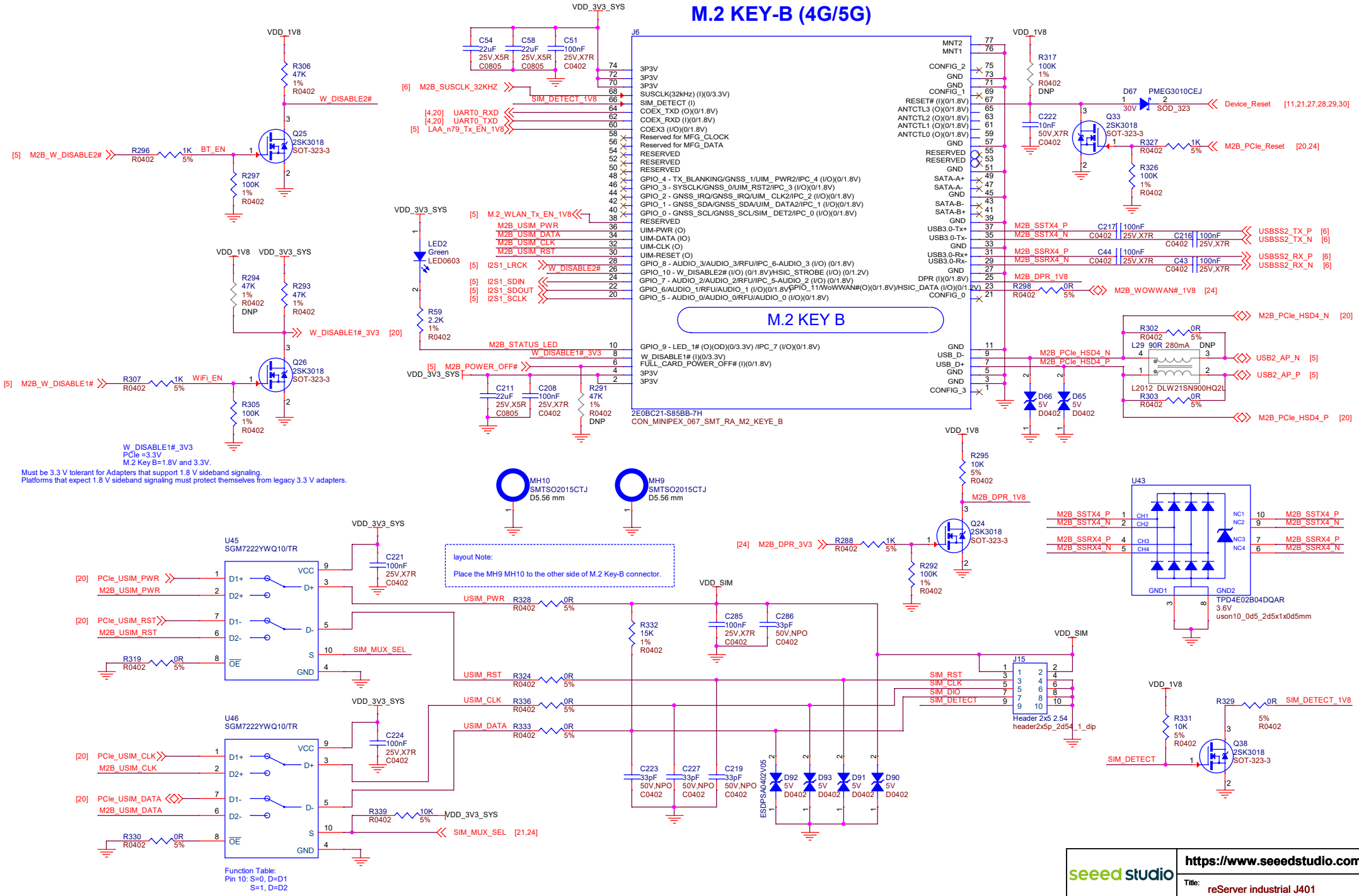

seeed studio	https://www.seeedstudio.com		
	Title: reServer industrial J401		
Size: A3	Document Number: 19 M.2 KEY-B (4G/5G)		Rev: v1.1
Draw By: qxn	Date: Wednesday, August 21, 2024		Sheet: 19 of 33

Mini PCIe (4G/LoRa)

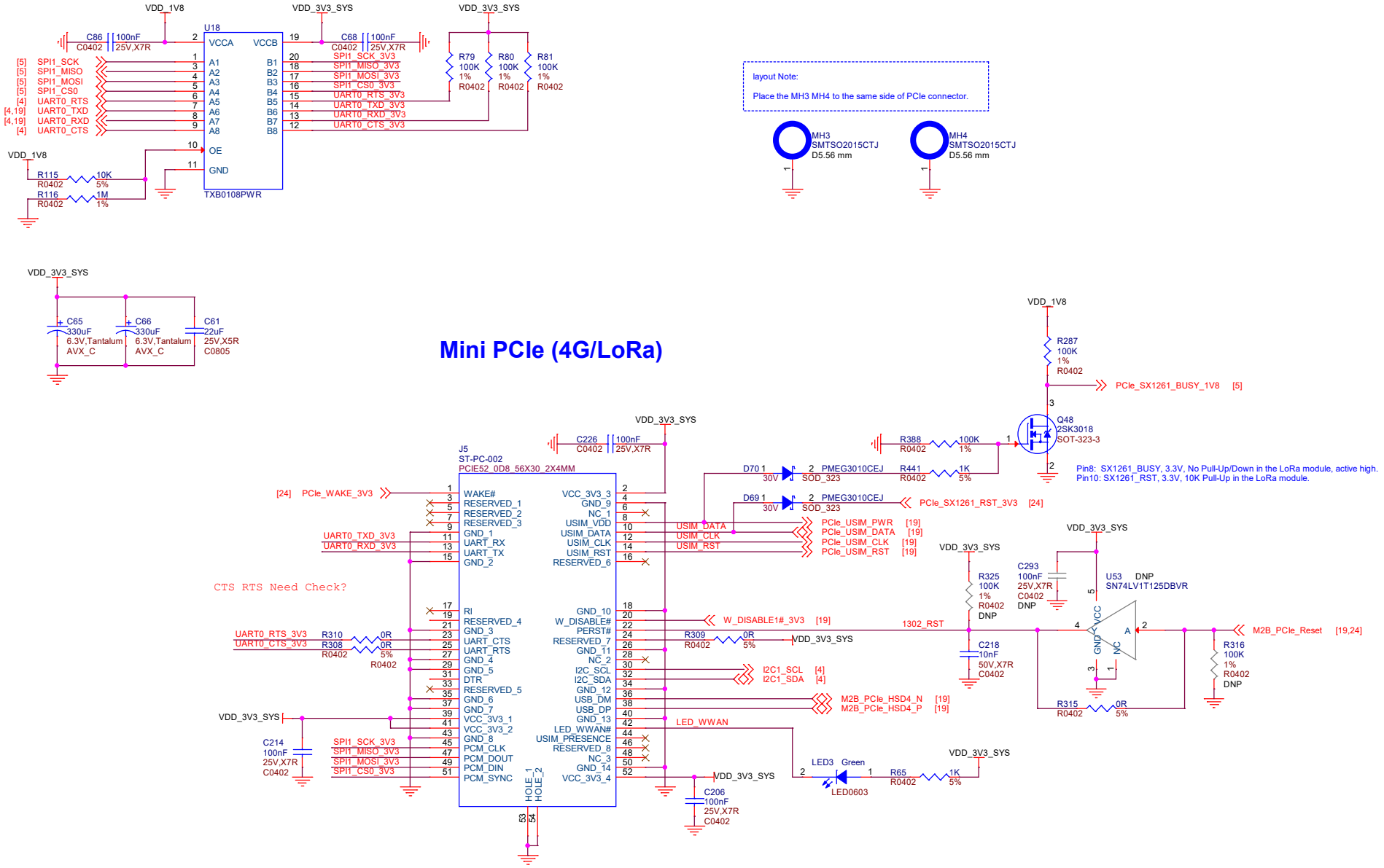

seeed studio	https://www.seeedstudio.com	
	Title: reServer industrial J401	
Size: A3	Document Number: 20 Mini PCIe (4G/LoRa)	Rev: v1.1
Draw By: qxn	Date: Wednesday, August 21, 2024	Sheet: 20 of 33

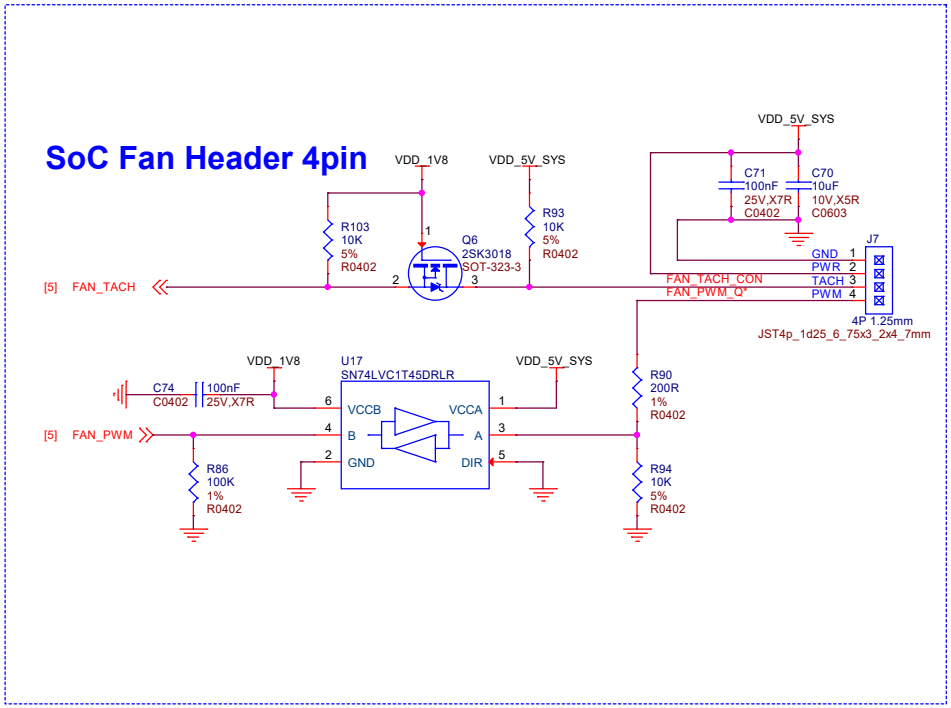

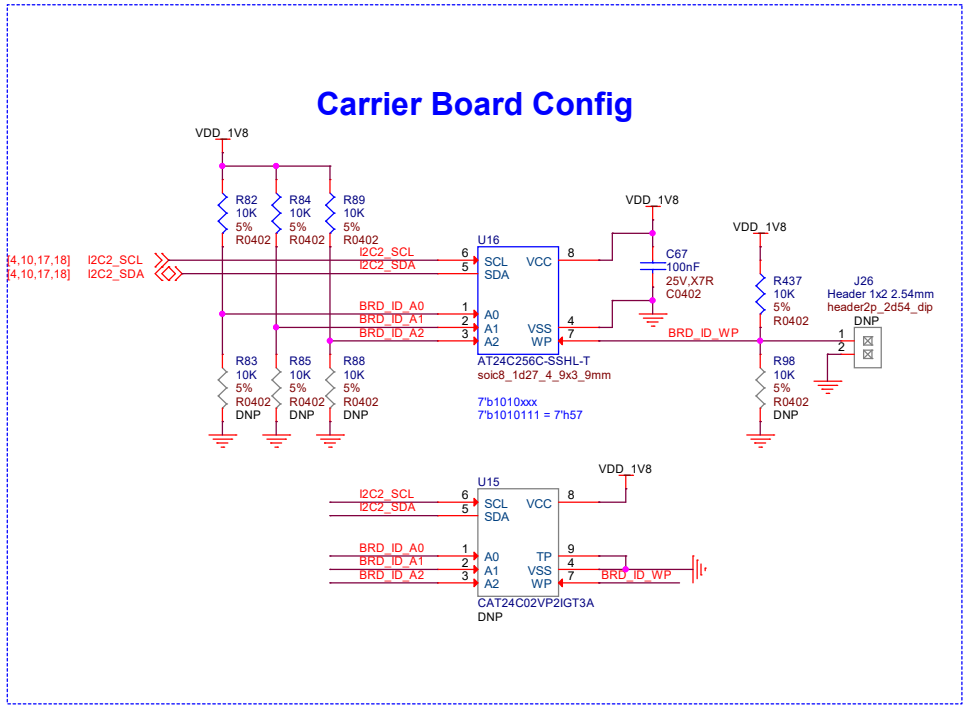

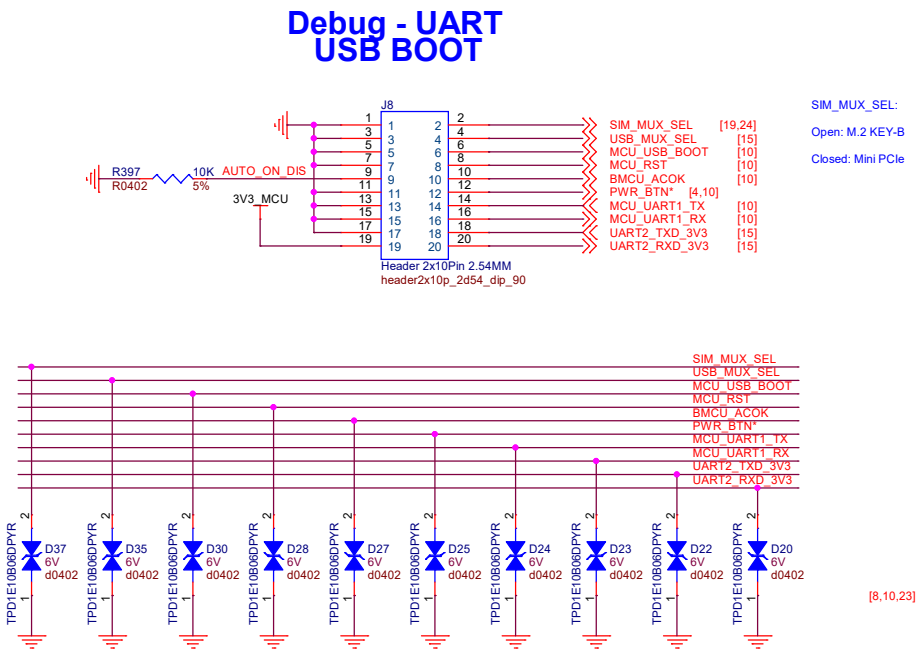

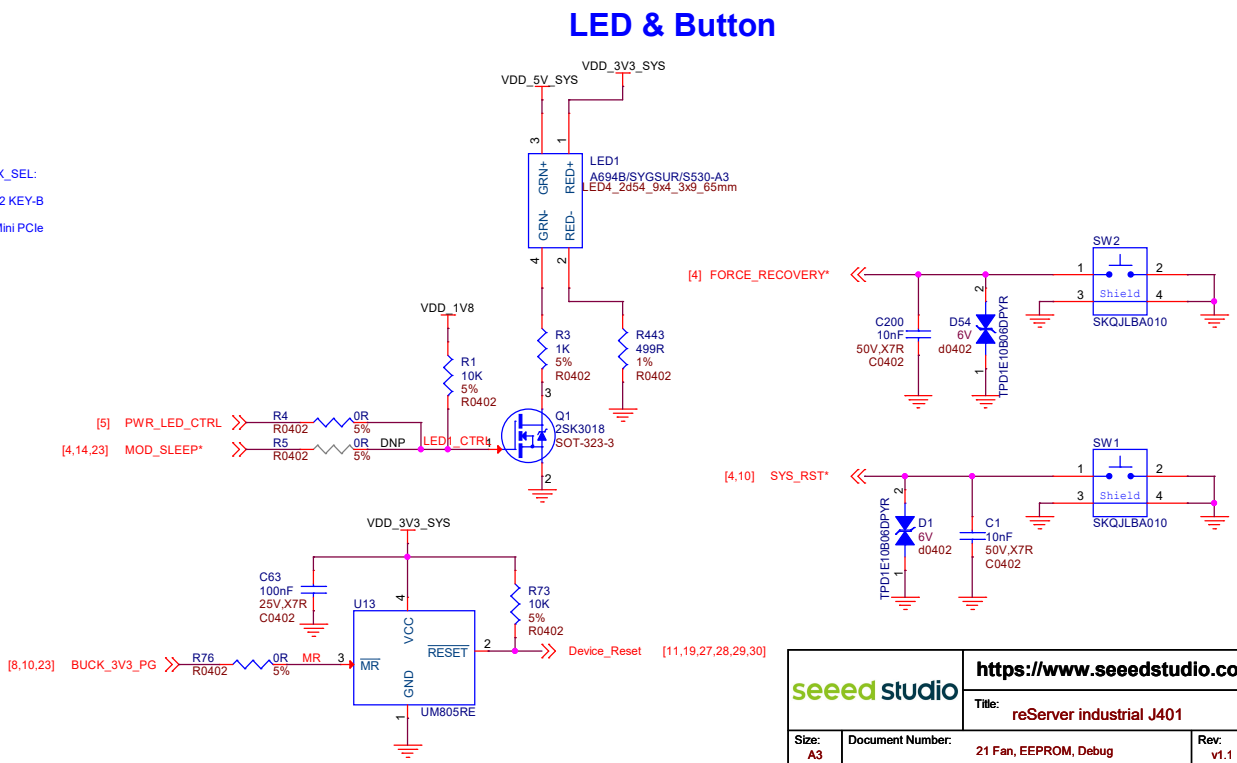

seeed studio

https://www.seeedstudio.com

Title: reServer industrial J401

Size: A3	Document Number: 21 Fan, EEPROM, Debug	Rev: v1.1
Draw By: qxn	Date: Wednesday, August 21, 2024	Sheet: 21 of 33

Digital Inputs (DI)

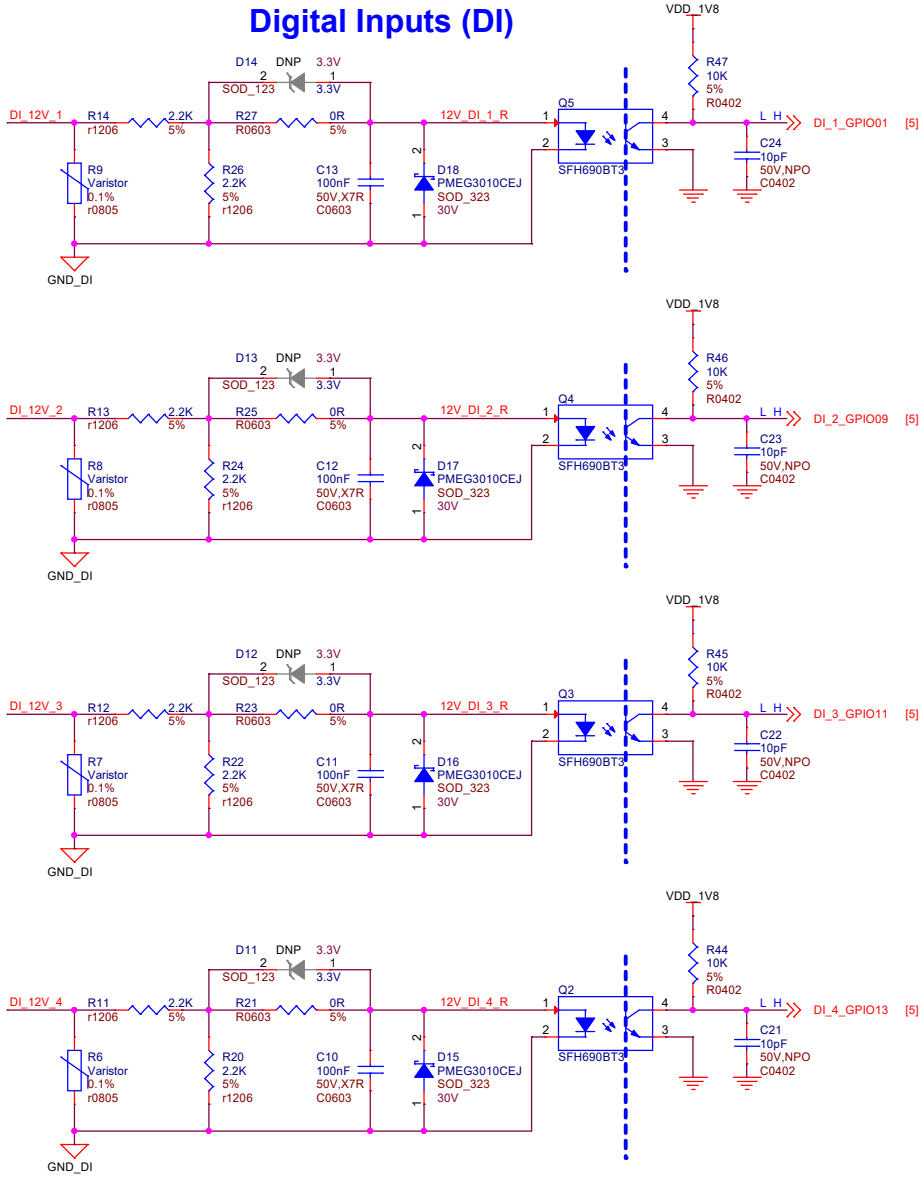

Digital Outputs (DO) rated 40V/0.2A

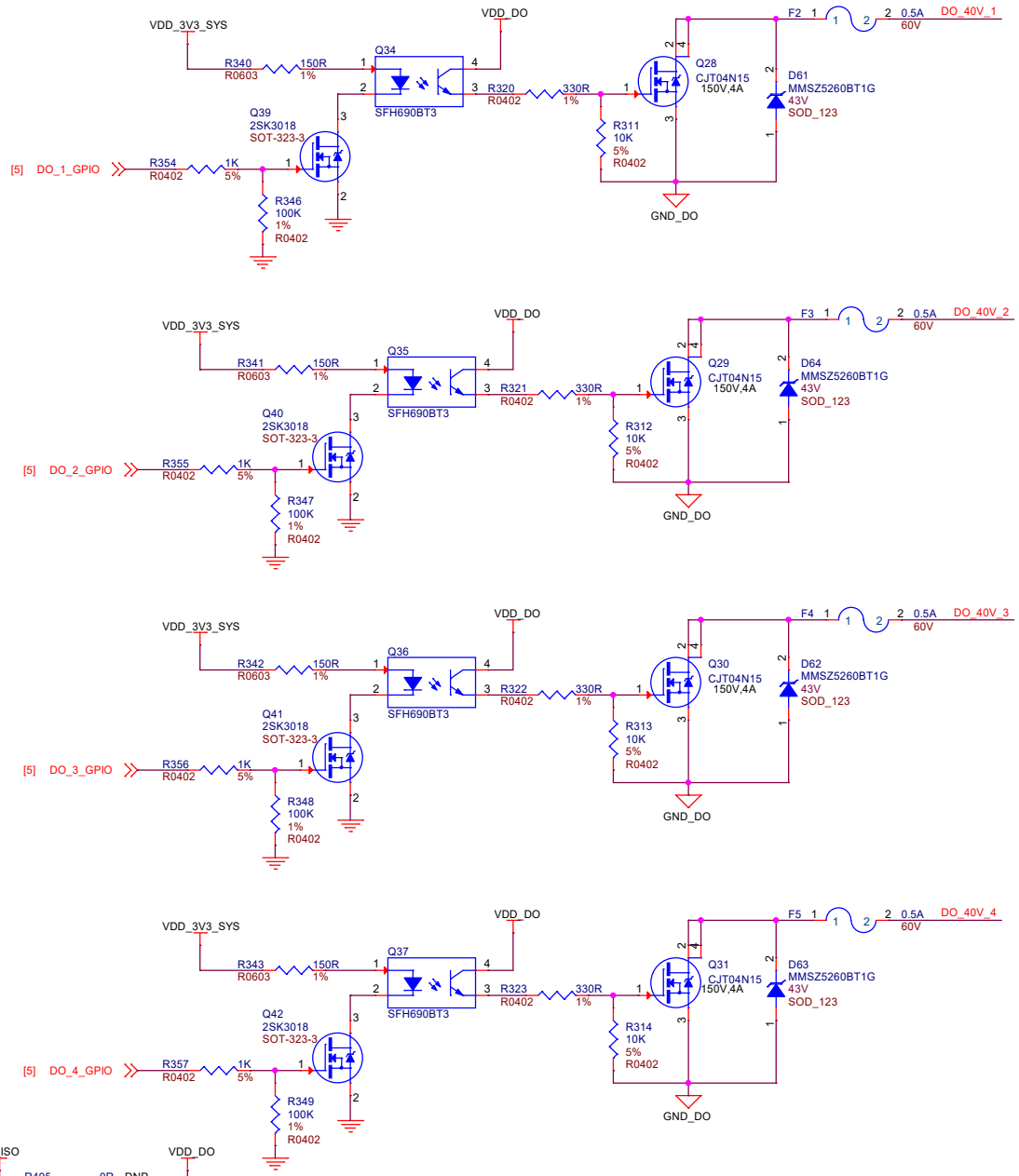

DI & DO & CAN

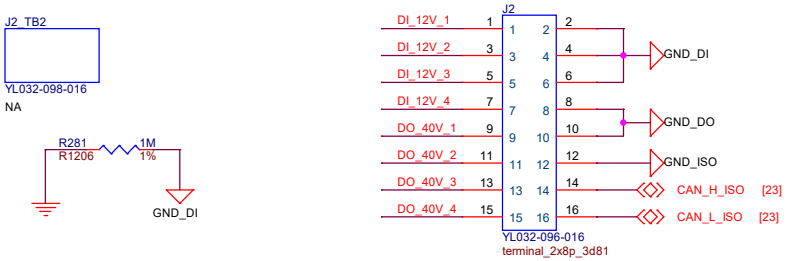

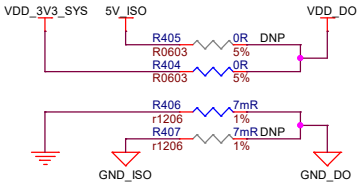

seeed studio	https://www.seeedstudio.com	
	Title: reServer industrial J401	
Size: A3	Document Number: 22 DI, DO	Rev: v1.1
Draw By: qxn	Date: Wednesday, August 21, 2024	Sheet: 22 of 33

Isolated DCDC 5V to 5V

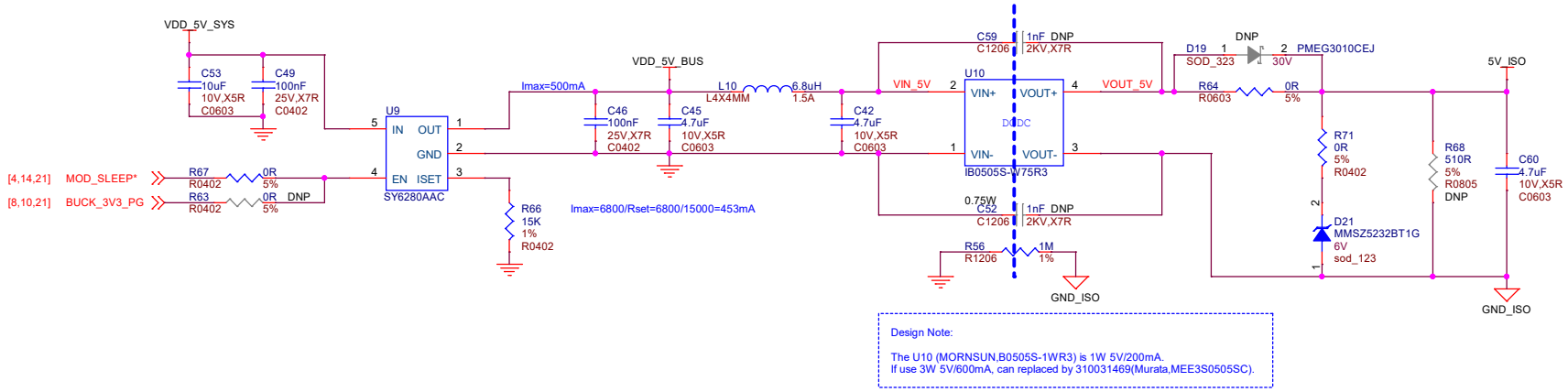

Design Note:

The U10 (MORNSUN,B0505S-1WR3) is 1W 5V/200mA.
If use 3W 5V/600mA, can replaced by 310031469(Murata,MEE3S0505SC).

CAN With ISO

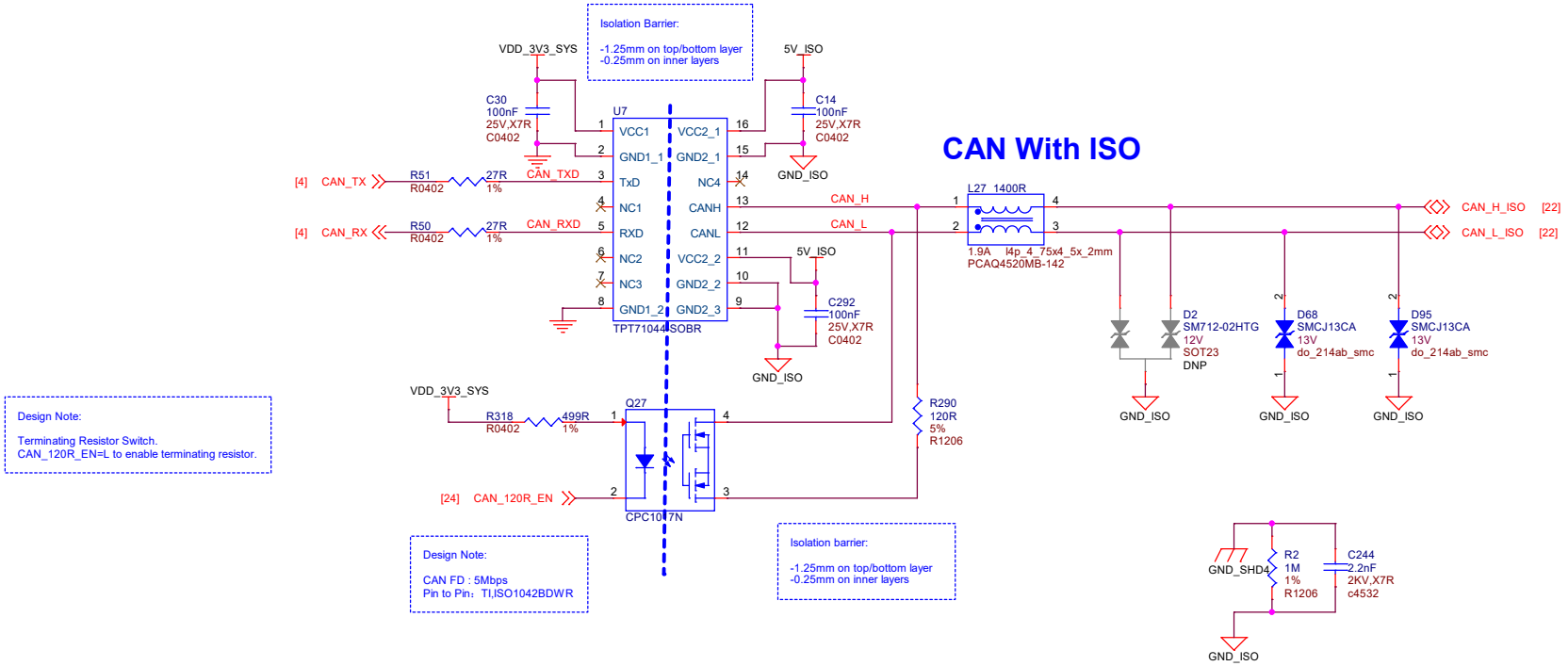

Design Note:

Terminating Resistor Switch.
CAN_120R_EN=L to enable terminating resistor.

Design Note:

CAN FD : 5Mbps
Pin to Pin：TI,ISO1042BDWR

Isolation barrier:

-1.25mm on top/bottom layer
-0.25mm on inner layers

seeed studio	https://www.seeedstudio.com	
	Title: reServer industrial J401	
Size: A3	Document Number: 23 CAN, Isolated 5V	Rev: v1.1
Draw By: qxn	Date: Wednesday, August 21, 2024	Sheet: 23 of 33

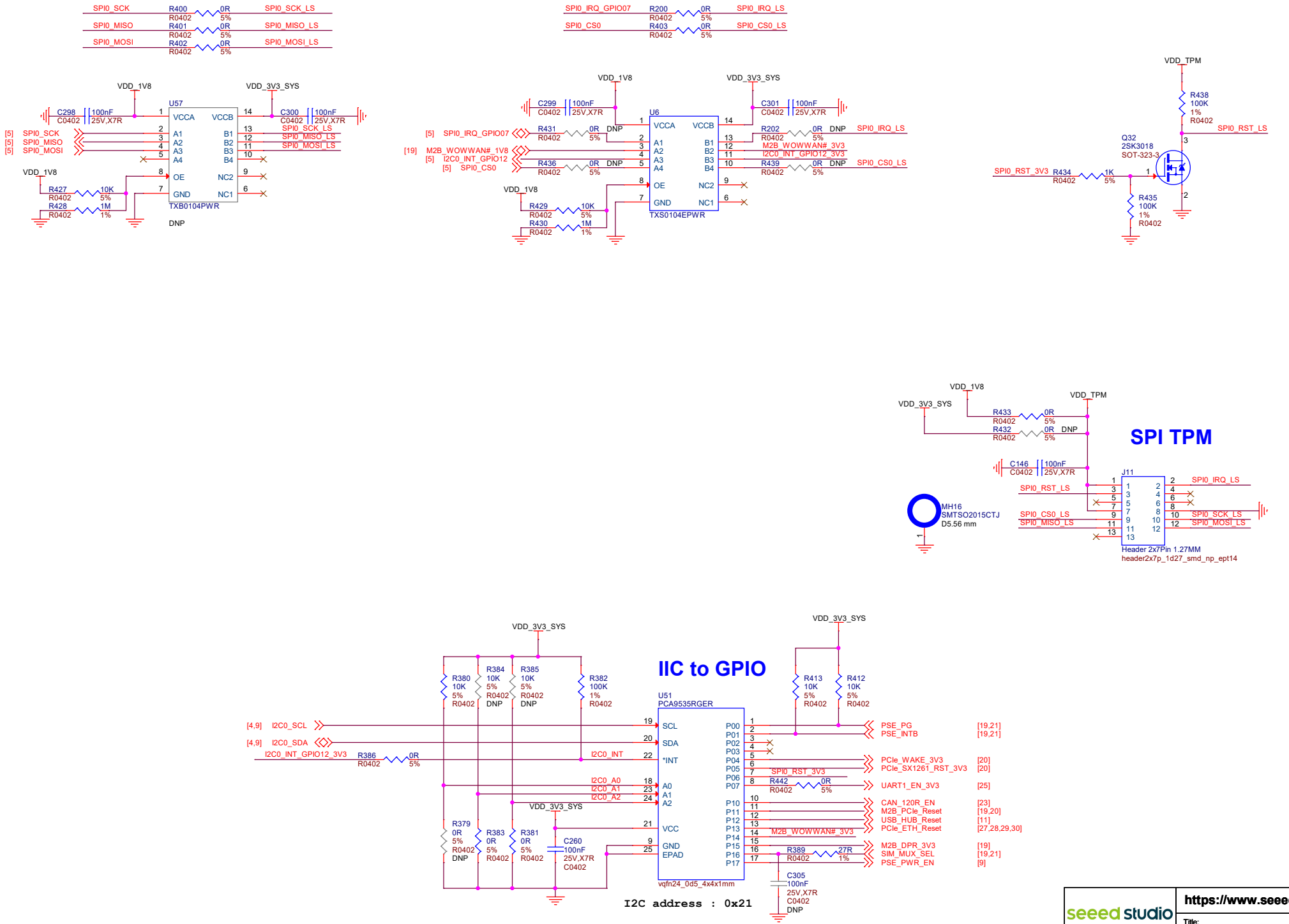
SPI0_SCK R400 0R R0402 5% SPI0_SCK_LS
SPI0_MISO R401 0R R0402 5% SPI0_MISO_LS
SPI0_MOSI R402 0R R0402 5% SPI0_MOSI_LS
SPI0_IRQ_GPIO07 R200 0R R0402 5% SPI0_IRQ_LS
SPI0_CS0 R403 0R R0402 5% SPI0_CS0_LS
VDD_1V8
VDD_3V3_SYS
U57
VCCA VCCB
A1 A2 A3 A4
B1 B2 B3 B4
OE NC2
GND NC1
TXB0104PWR
DNP
C298 100nF C0402 25V,X7R
C300 100nF C0402 25V,X7R
[5] SPI0_SCK
[5] SPI0_MISO
[5] SPI0_MOSI
R427 10K R0402 5%
R428 1M R0402 1%
U6
TXS0104EPWR
C299 100nF C0402 25V,X7R
C301 100nF C0402 25V,X7R
[5] SPI0_IRQ_GPIO07
[19] M2B_WOWWAN#_1V8
[5] I2C0_INT_GPIO12
[5] SPI0_CS0
R431 0R R0402 5% DNP
R436 0R R0402 5% DNP
R202 0R R0402 5% DNP SPI0_IRQ_LS
M2B_WOWWAN#_3V3
I2C0_INT_GPIO12_3V3
R439 0R R0402 5% DNP SPI0_CS0_LS
R429 10K R0402 5%
R430 1M R0402 1%
VDD_TPM
R438 100K 1% R0402
SPI0_RST_LS
Q32 2SK3018 SOT-323-3
SPI0_RST_3V3 R434 1K R0402 5%
R435 100K 1% R0402
SPI TPM
R433 0R R0402 5%
R432 0R R0402 5% DNP
C146 100nF C0402 25V,X7R
J11
SPI0_RST_LS
SPI0_CS0_LS
SPI0_MISO_LS
SPI0_IRQ_LS
SPI0_SCK_LS
SPI0_MOSI_LS
MH16 SMTSO2015CTJ D5.56 mm
Header 2x7Pin 1.27MM
header2x7p_1d27_smd_np_ept14
IIC to GPIO
U51 PCA9535RGER
R380 10K 5% R0402
R384 10K 5% R0402 DNP
R385 10K 5% R0402 DNP
R382 100K 1% R0402
R413 10K 5% R0402
R412 10K 5% R0402
[4,9] I2C0_SCL
[4,9] I2C0_SDA
I2C0_INT_GPIO12_3V3 R386 0R R0402 5%
I2C0_INT
I2C0_A0
I2C0_A1
I2C0_A2
SCL SDA *INT A0 A1 A2 VCC GND EPAD
P00 P01 P02 P03 P04 P05 P06 P07 P10 P11 P12 P13 P14 P15 P16 P17
PSE_PG [19,21]
PSE_INTB [19,21]
PCIe_WAKE_3V3 [20]
PCIe_SX1261_RST_3V3 [20]
SPI0_RST_3V3
R442 0R R0402 5%
UART1_EN_3V3 [25]
CAN_120R_EN [23]
M2B_PCIe_Reset [19,20]
USB_HUB_Reset [11]
PCIe_ETH_Reset [27,28,29,30]
M2B_WOWWAN#_3V3
M2B_DPR_3V3 [19]
SIM_MUX_SEL [19,21]
PSE_PWR_EN [9]
R389 27R R0402 1%
R379 0R 5% R0402 DNP
R383 0R 5% R0402
R381 0R 5% R0402
C260 100nF 25V,X7R C0402
C305 100nF 25V,X7R C0402 DNP
vqfn24_0d5_4x4x1mm
I2C address : 0x21
seeed studio
https://www.seeedstudio.com
Title: reServer industrial J401
Size: A3
Document Number: 24 TPM, IIC to IO
Rev: v1.1
Draw By: qxn
Date: Wednesday, August 21, 2024
Sheet: 24 of 33

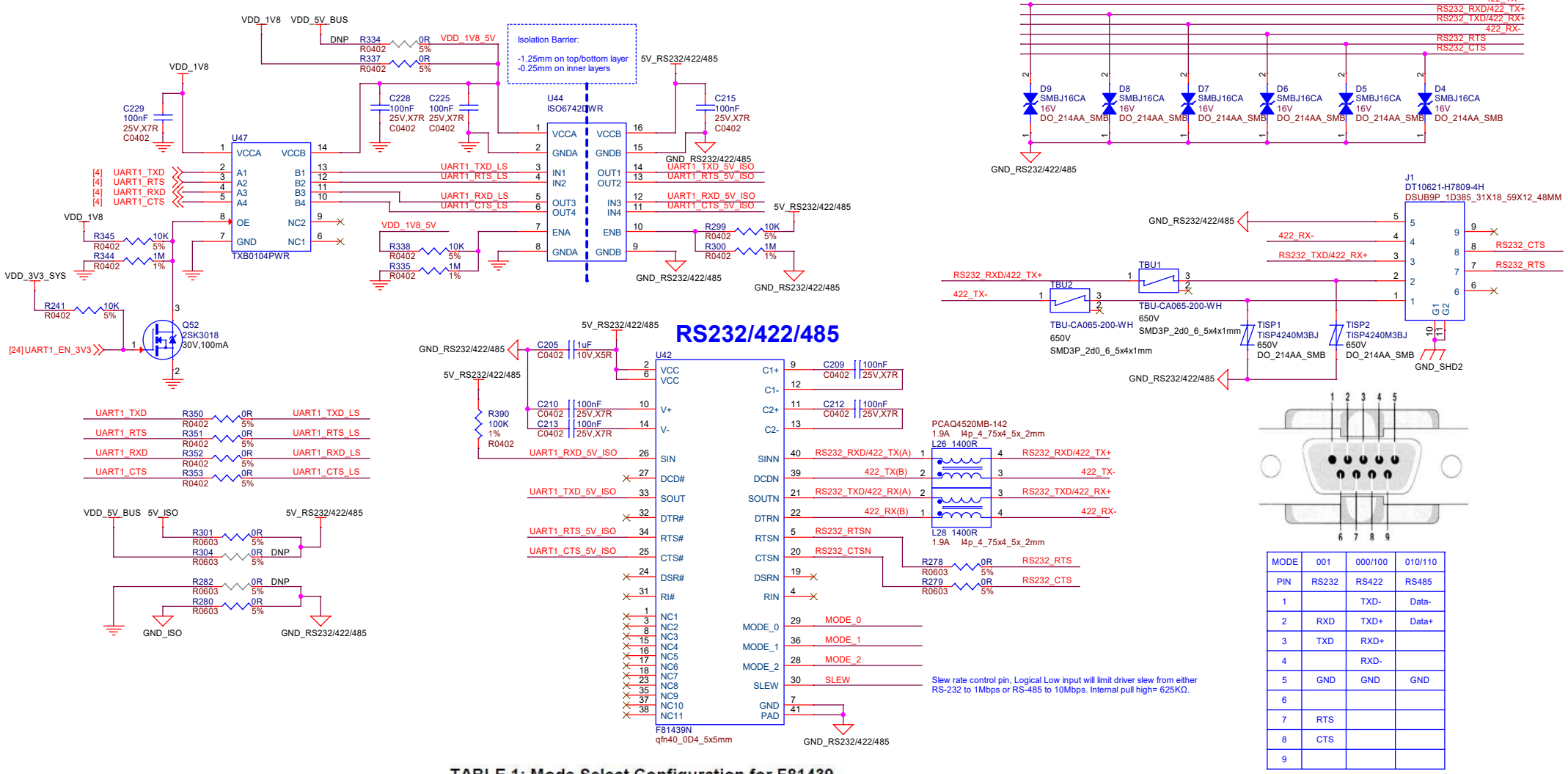

MODE	001	000/100	010/110
PIN	RS232	RS422	RS485
1		TXD-	Data-
2	RXD	TXD+	Data+
3	TXD	RXD+	
4		RXD-	
5	GND	GND	GND
6			
7	RTS		
8	CTS		
9			

TABLE 1: Mode Select Configuration for F81439

Pin 29 MODE_0	Pin 36 MODE_1	Pin28 MODE_2	Mode	Status
0	0	0	RS-422 Full Duplex	1T/1R RS-422
0	0	1	Pure RS-232	3T/5R RS-232.
0	1	0	RS-485 Half Duplex	1T/1R RS-485 ,TX ENABLE Low Active
0	1	1	RS-485 Half Duplex	1T/1R RS-485 ,TX ENABLE High Active
1	0	0	RS-422 Full Duplex	1T/1R RS-422 with termination resistor
1	0	1	Pure RS-232	1T/1R RS-232 co-exists with RS485 application without the need for the bus switch IC (for special usage).
1	1	0	RS-485 Half Duplex	1T/1R RS-485 with termination resistor TX ENABLE Low Active
1	1	1	Low Power Shutdown	All I/O pins are High Impedance

seeed studio

https://www.seeedstudio.com

Title: reServer industrial J401

Size: A3	Document Number: 25 RS232/422/485	Rev: v1.1
Draw By: qxn	Date: Wednesday, August 21, 2024	Sheet: 25 of 33

Gigabit Ethernet

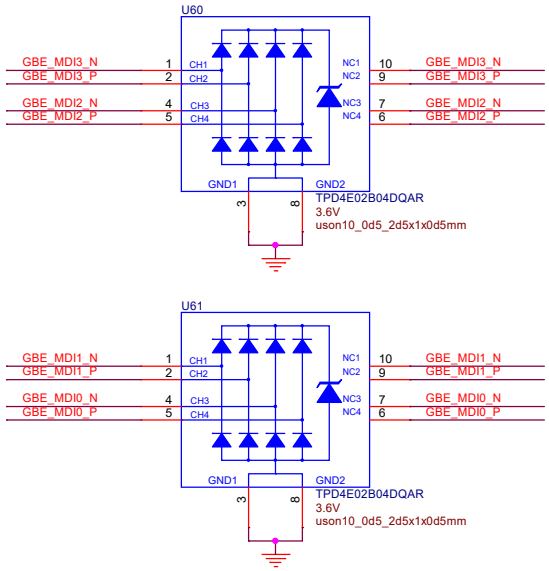

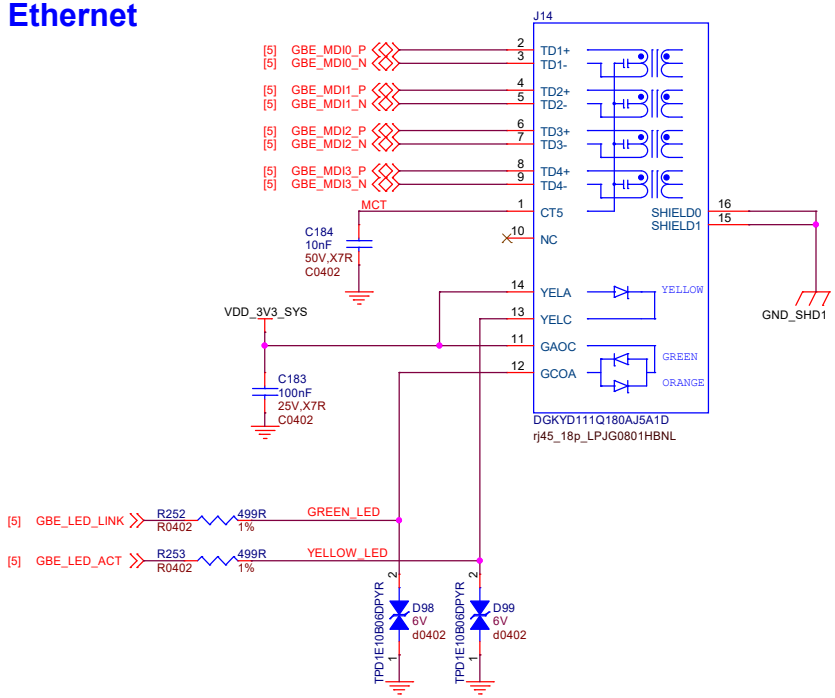

seeed studio	https://www.seeedstudio.com	
	Title: reServer industrial J401	
Size: A3	Document Number: 26 Gigabit Ethernet	Rev: v1.1
Draw By: qxn	Date: Wednesday, August 21, 2024	Sheet: 26 of 33

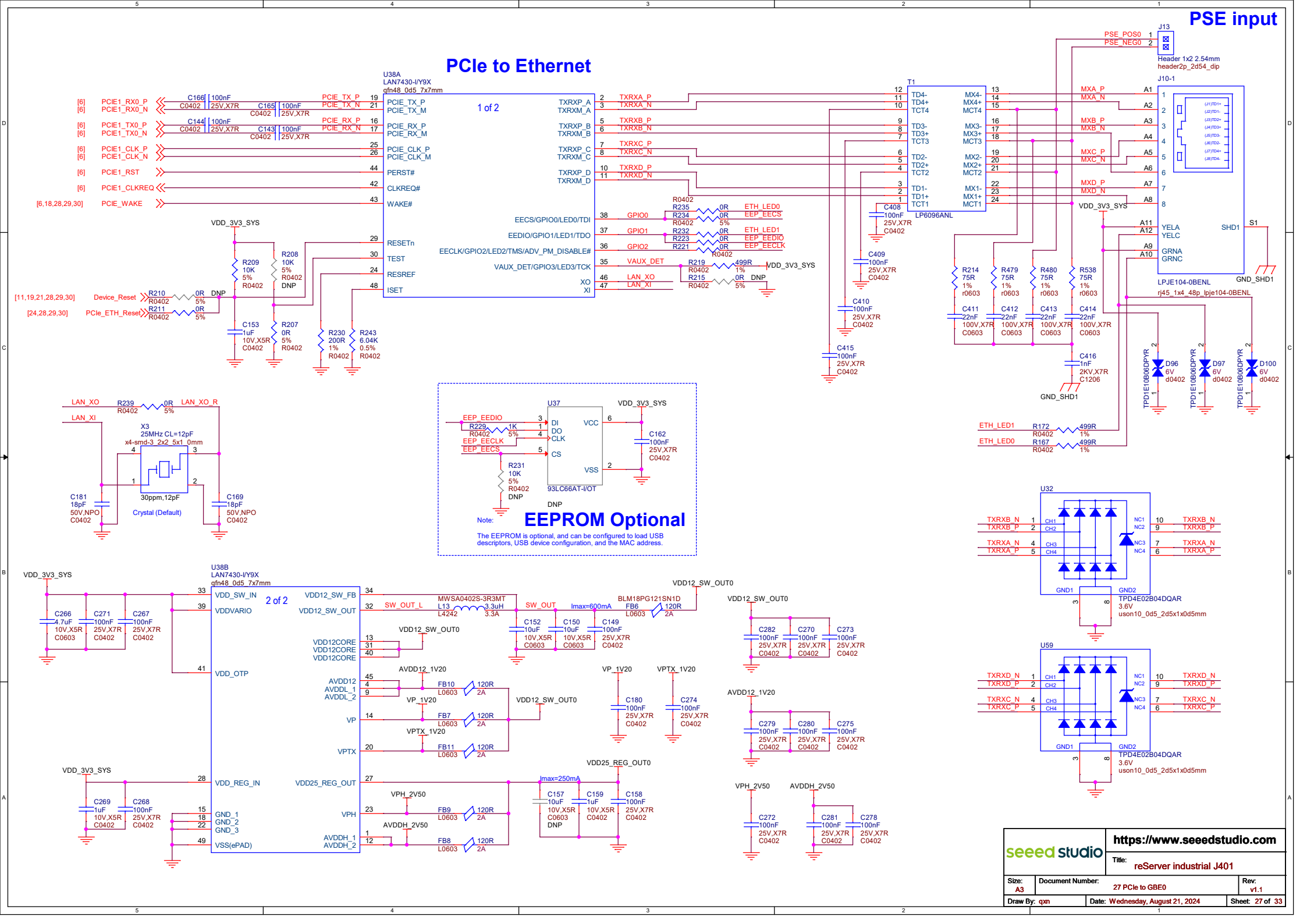

seeed studio	https://www.seeedstudio.com	
	Title: reServer industrial J401	
Size: A3	Document Number: 27 PCIe to GBE0	Rev: v1.1
Draw By: qxn	Date: Wednesday, August 21, 2024	Sheet: 27 of 33

PCIe to Ethernet

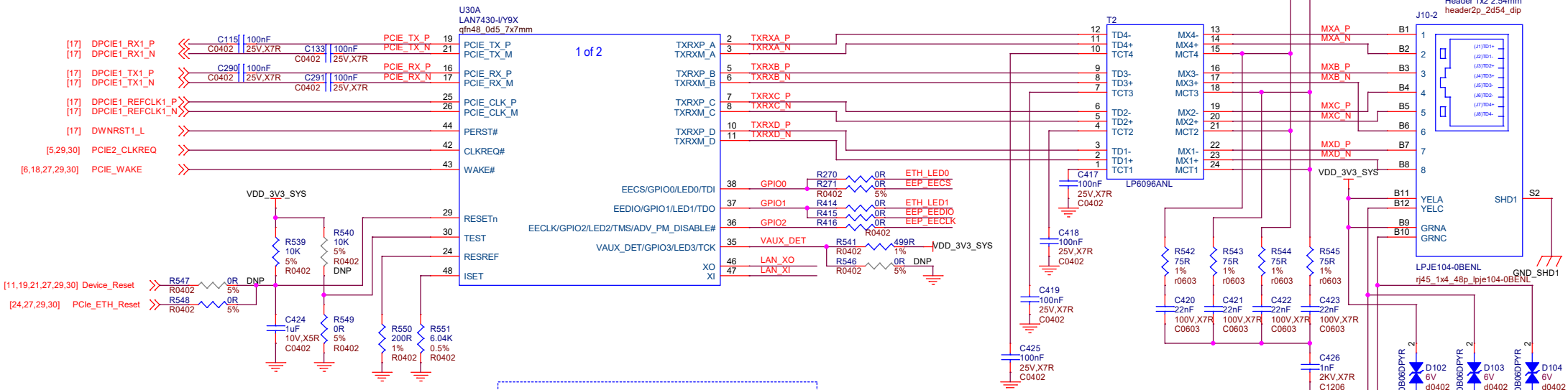

PSE input

EEPROM Optional

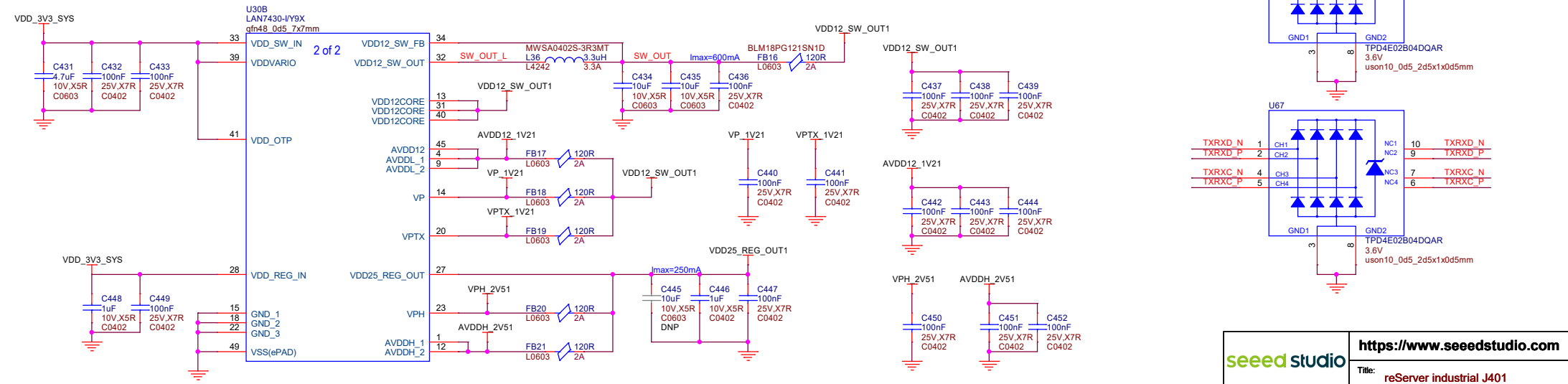

seeed studio

https://www.seeedstudio.com

Title: reServer industrial J401

Size: A3	Document Number: 28 PCIe to GBE1	Rev: v1.1
Draw By: qxn	Date: Wednesday, August 21, 2024	Sheet: 28 of 33

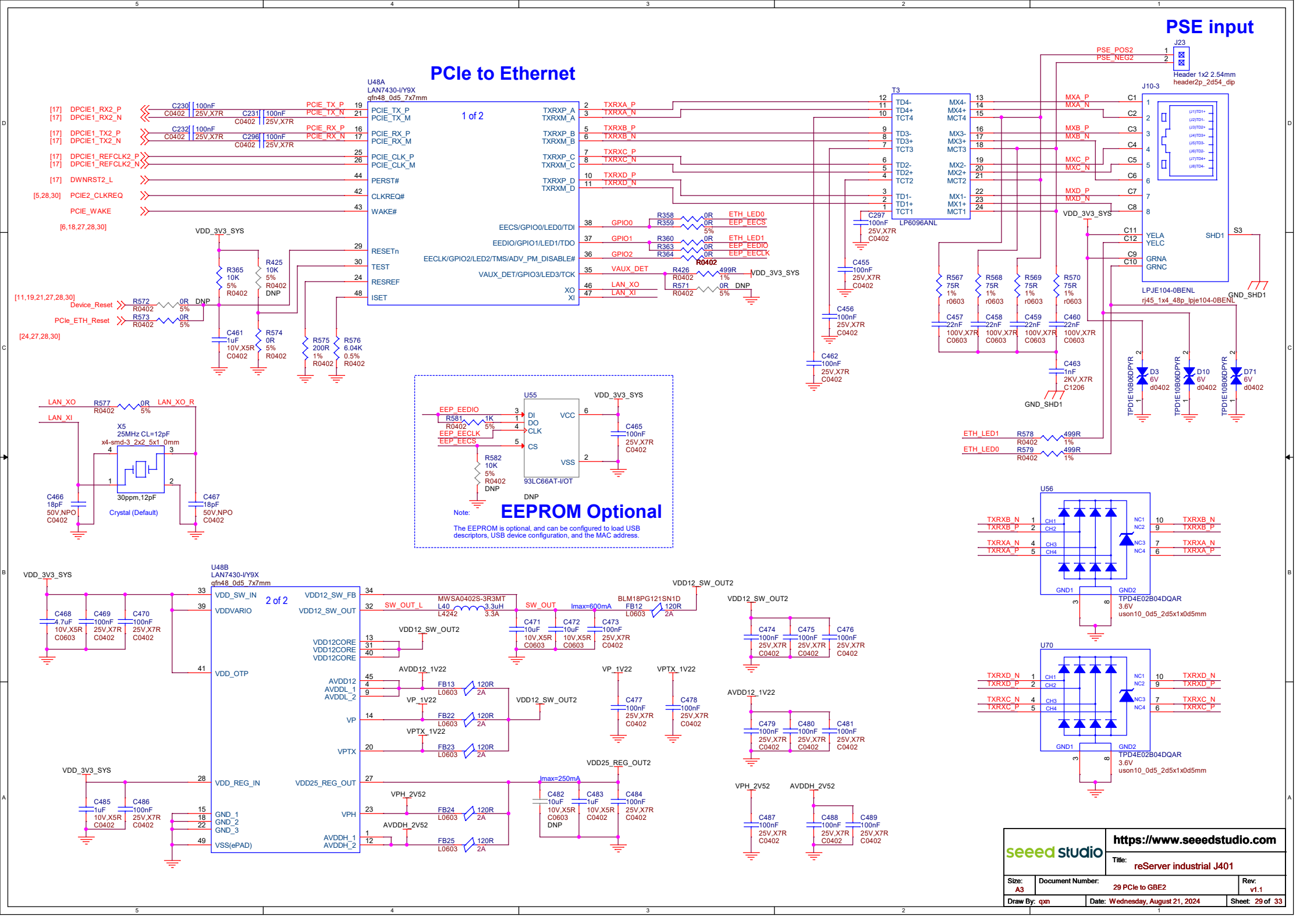
PSE input
PCIe to Ethernet
U48A
LAN7430-I/Y9X
qfn48_0d5_7x7mm
1 of 2
PCIE_TX_P
PCIE_TX_M
PCIE_RX_P
PCIE_RX_M
PCIE_CLK_P
PCIE_CLK_M
PERST#
CLKREQ#
WAKE#
RESETn
TEST
RESREF
ISET
TXRXP_A
TXRXM_A
TXRXP_B
TXRXM_B
TXRXP_C
TXRXM_C
TXRXP_D
TXRXM_D
EECS/GPIO0/LED0/TDI
EEDIO/GPIO1/LED1/TDO
EECLK/GPIO2/LED2/TMS/ADV_PM_DISABLE#
VAUX_DET/GPIO3/LED3/TCK
XO
XI
[17] DPCIE1_RX2_P
[17] DPCIE1_RX2_N
[17] DPCIE1_TX2_P
[17] DPCIE1_TX2_N
[17] DPCIE1_REFCLK2_P
[17] DPCIE1_REFCLK2_N
[17] DWNRST2_L
[5,28,30] PCIE2_CLKREQ
PCIE_WAKE
[6,18,27,28,30]
VDD_3V3_SYS
[11,19,21,27,28,30]
Device_Reset
PCIe_ETH_Reset
[24,27,28,30]
LAN_XO
LAN_XI
LAN_XO_R
X5
25MHz CL=12pF
x4-smd-3_2x2_5x1_0mm
30ppm,12pF
Crystal (Default)
U55
93LC66AT-I/OT
EEP_EEDIO
EEP_EECLK
EEP_EECS
DI
DO
CLK
CS
VCC
VSS
DNP
Note:
EEPROM Optional
The EEPROM is optional, and can be configured to load USB descriptors, USB device configuration, and the MAC address.
U48B
LAN7430-I/Y9X
qfn48_0d5_7x7mm
2 of 2
VDD_SW_IN
VDDVARIO
VDD_OTP
VDD_REG_IN
GND_1
GND_2
GND_3
VSS(ePAD)
VDD12_SW_FB
VDD12_SW_OUT
VDD12CORE
VDD12CORE
VDD12CORE
AVDD12
AVDDL_1
AVDDL_2
VP
VPTX
VDD25_REG_OUT
VPH
AVDDH_1
AVDDH_2
SW_OUT_L
MWSA0402S-3R3MT
L40
3.3uH
L4242
3.3A
SW_OUT
Imax=600mA
BLM18PG121SN1D
FB12
120R
2A
VDD12_SW_OUT2
AVDD12_1V22
VP_1V22
VPTX_1V22
VPH_2V52
AVDDH_2V52
Imax=250mA
VDD25_REG_OUT2
T3
LP6096ANL
TD4-
TD4+
TCT4
TD3-
TD3+
TCT3
TD2-
TD2+
TCT2
TD1-
TD1+
TCT1
MX4-
MX4+
MCT4
MX3-
MX3+
MCT3
MX2-
MX2+
MCT2
MX1-
MX1+
MCT1
PSE_POS2
PSE_NEG2
J23
Header 1x2 2.54mm
header2p_2d54_dip
J10-3
MXA_P
MXA_N
MXB_P
MXB_N
MXC_P
MXC_N
MXD_P
MXD_N
YELA
YELC
GRNA
GRNC
SHD1
S3
LPJE104-0BENL
rj45_1x4_48p_lpje104-0BENL
GND_SHD1
ETH_LED1
ETH_LED0
U56
U70
TPD4E02B04DQAR
3.6V
uson10_0d5_2d5x1x0d5mm
TXRXB_N
TXRXB_P
TXRXA_N
TXRXA_P
TXRXD_N
TXRXD_P
TXRXC_N
TXRXC_P
seeed studio
https://www.seeedstudio.com
Title:
reServer industrial J401
Size: A3
Document Number: 29 PCIe to GBE2
Rev: v1.1
Draw By: qxn
Date: Wednesday, August 21, 2024
Sheet: 29 of 33

PCIe to Ethernet

PSE input

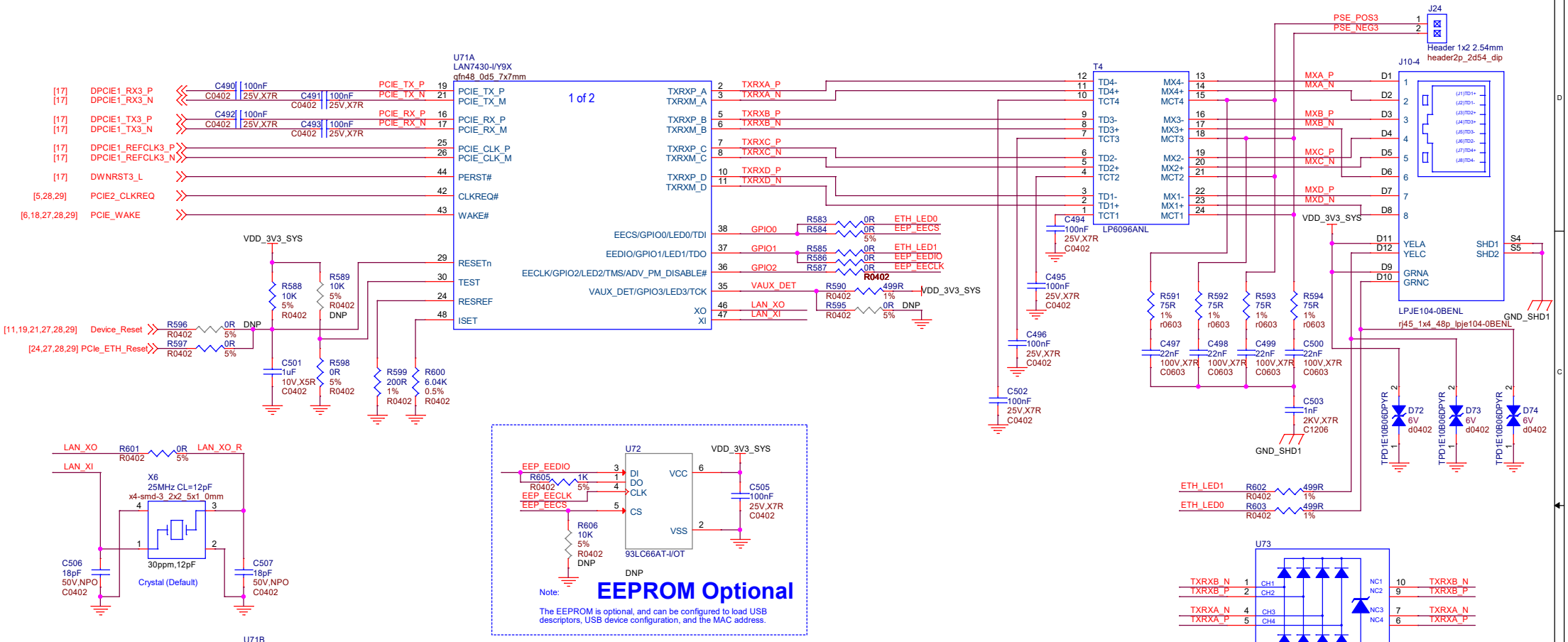

seeed studio

https://www.seeedstudio.com

Title: reServer industrial J401

Size: A3	Document Number: 30 PCIe to GBE3	Rev: v1.1
Draw By: qxn	Date: Wednesday, August 21, 2024	Sheet: 30 of 33

Sata Controller

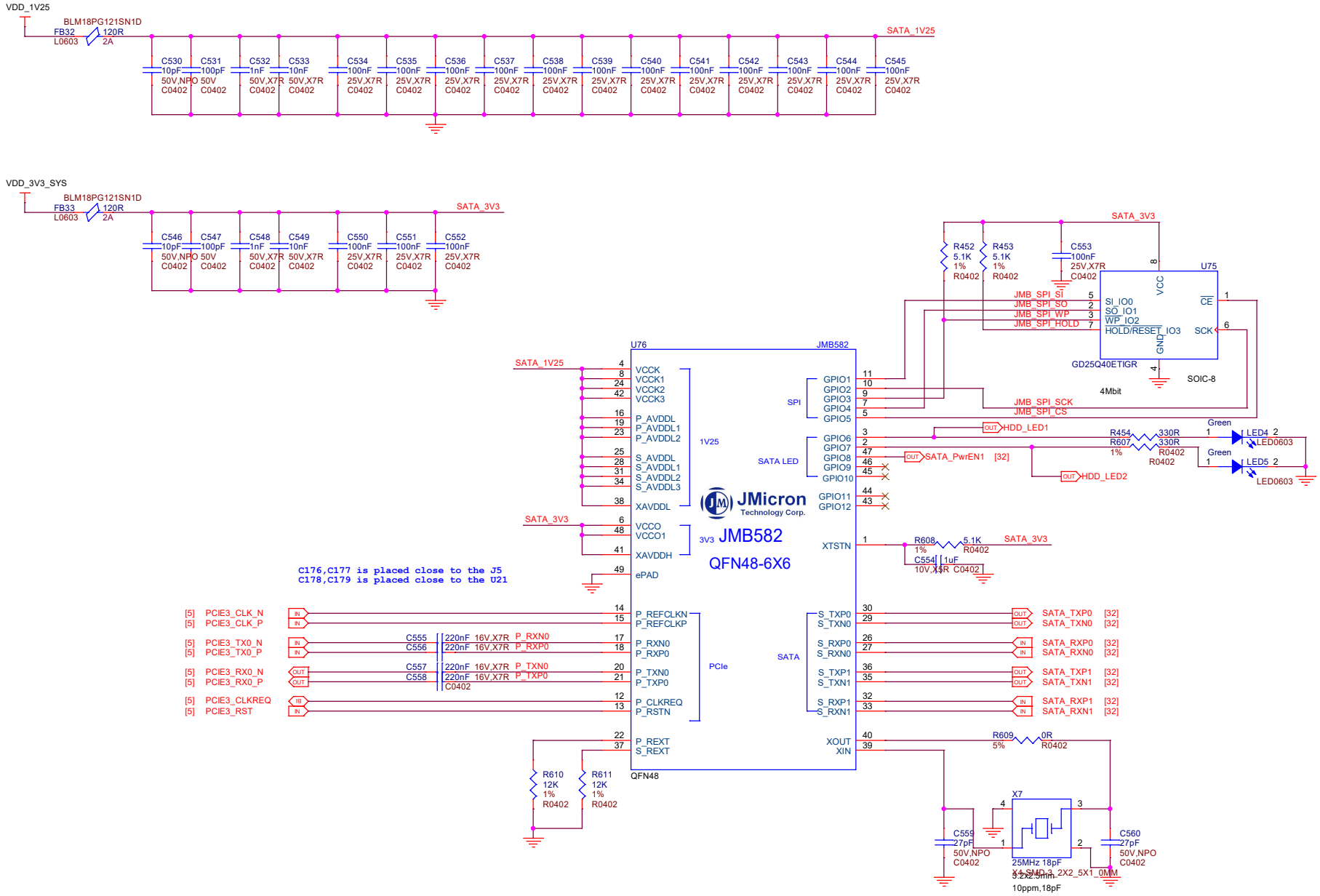

seeed studio	https://www.seeedstudio.com	
	Title: reServer industrial J401	
Size: A3	Document Number: 31 SATA_Controller	Rev: v1.1
Draw By: qxn	Date: Wednesday, August 21, 2024	Sheet: 31 of 33

2.5" Sata connector

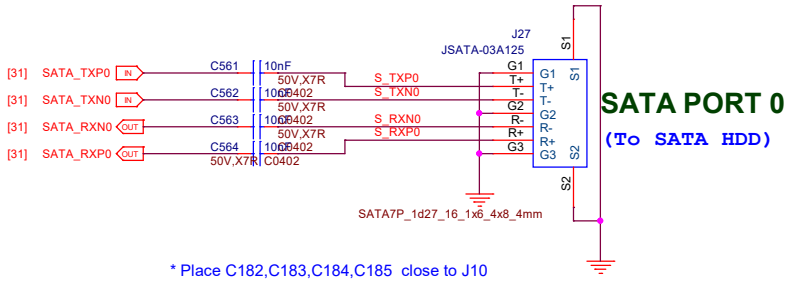

* Place C182,C183,C184,C185 close to J10

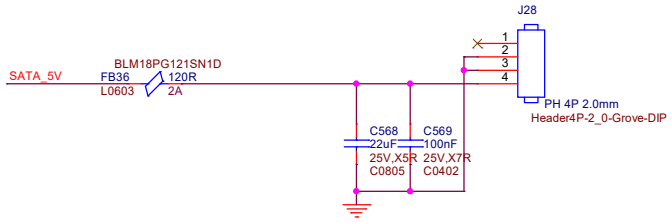

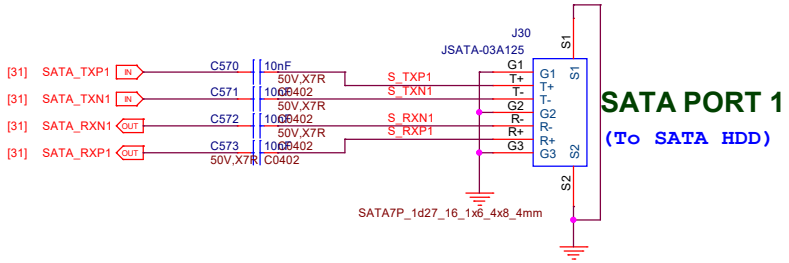

* Place C190,C191,C192,C193 close to J12

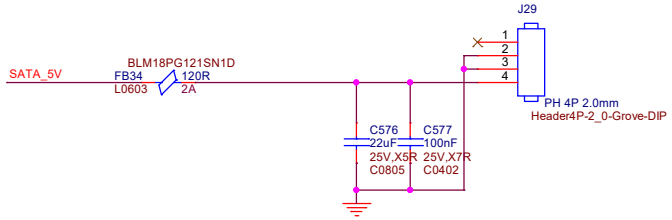

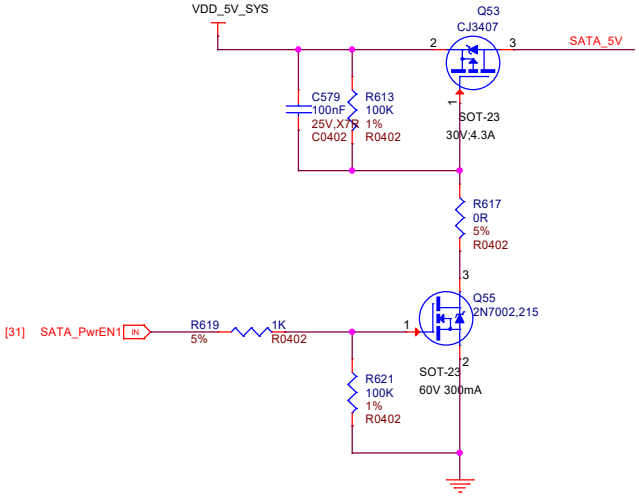

seeed studio	https://www.seeedstudio.com	
	Title: reServer industrial J401	
Size: A3	Document Number: 32 SATA_Connector	Rev: v1.1
Draw By: qxn	Date: Wednesday, August 21, 2024	Sheet: 32 of 33