深圳市港晶鑫电子科技有限公司
Shenzhen GJX Electronics Technology Co.,Ltd

SPECIFICATION

Customer: _____

Model Name: GJX080C13-31BN

ERP NO.: 1010800112

Spec Vision: V.1

Date: 2021-08-03

■ **Preliminary Specification**

☐ **Final Specification**

Approved by	Comment

Prepared by	Reviewed by	Approved by

Shenzhen GJX Electronics Technology Co.,Ltd
Address: Room J2, 8th Floor, Building 13, Lehui Science and Technology Innovation Center, No. 489 Jihua Road, Bantian Street, Longgang District, Shenzhen
Fax:86-755-25166716 Fax:86-755-28225065
Mail:kevin@gjx-tech.com Web:www.gjx-tech.com

REVISION STATUS

Revision Notice	Description	Page	Rev. Date
0.0	First revision (Tentative)	--	2020.08.09

TABLE OF CONTENTS

NO.	CONTENTS	PAGE

REVISION STATUS 2
TABLE OF CONTENTS 3
1. GENERAL DESCRIPTION 4
2. MECHANICAL SPECIFICATION 5
3. PIN DESCRIPTION 6
4. ELECTRICAL CHARACTERISTICS 7
5. Electrical Specification 10
6.DC CHARACTERISTICS 11
7.OPTICAL CHARACTERISTICS 12
8.RELIABILITY TEST ITEMS 15
9. GENERAL PRECAUTION 16
10. PACKAGE DRAWING 17

1. General Description

1.1 Description

GJX080C13-31BN is a color active matrix thin film transistor (TFT) IPS liquid crystal display (LCD) that uses amorphous silicon TFT as a switching device. It is composed of a TFT LCD panel, Driver IC ,FPC and Backlight.

1.2 Features:

No.	Item	Specification	Unit
1	Panel Size	8”	inch
2	Number of Pixels	800×1280	pixels
3	Active Area	107.64(H)x 172.224(V)	mm
4	Pixel Pitch	0.13455(H)×0.13455(V)	mm
5	Outline Dimension	184 .1(H)×114.6(W)×2.6(D)	mm
6	Number of Colors	16.7M	-
7	Display Mode	Normally black	-
8	Viewing Direction	IPS	-
9	Display Format	RGB vertical stripe	-
10	Luminance (cd/m^2)	250(TYP.)	CD/M2
11	Contrast Ratio	700(TYP.)	
12	Surface Treatment	Anti-Glare	-
13	Interface	MIPI	-
14	Backlight	White LED	-
15	Operation Temperature	-10~50	℃
16	Storage Temperature	-20~60	℃
17	Weight	TBD	g
18	IC	9365DA-H3	

2. MECHANICAL SPECIFICATION

由 Autodesk 教育版产品制作

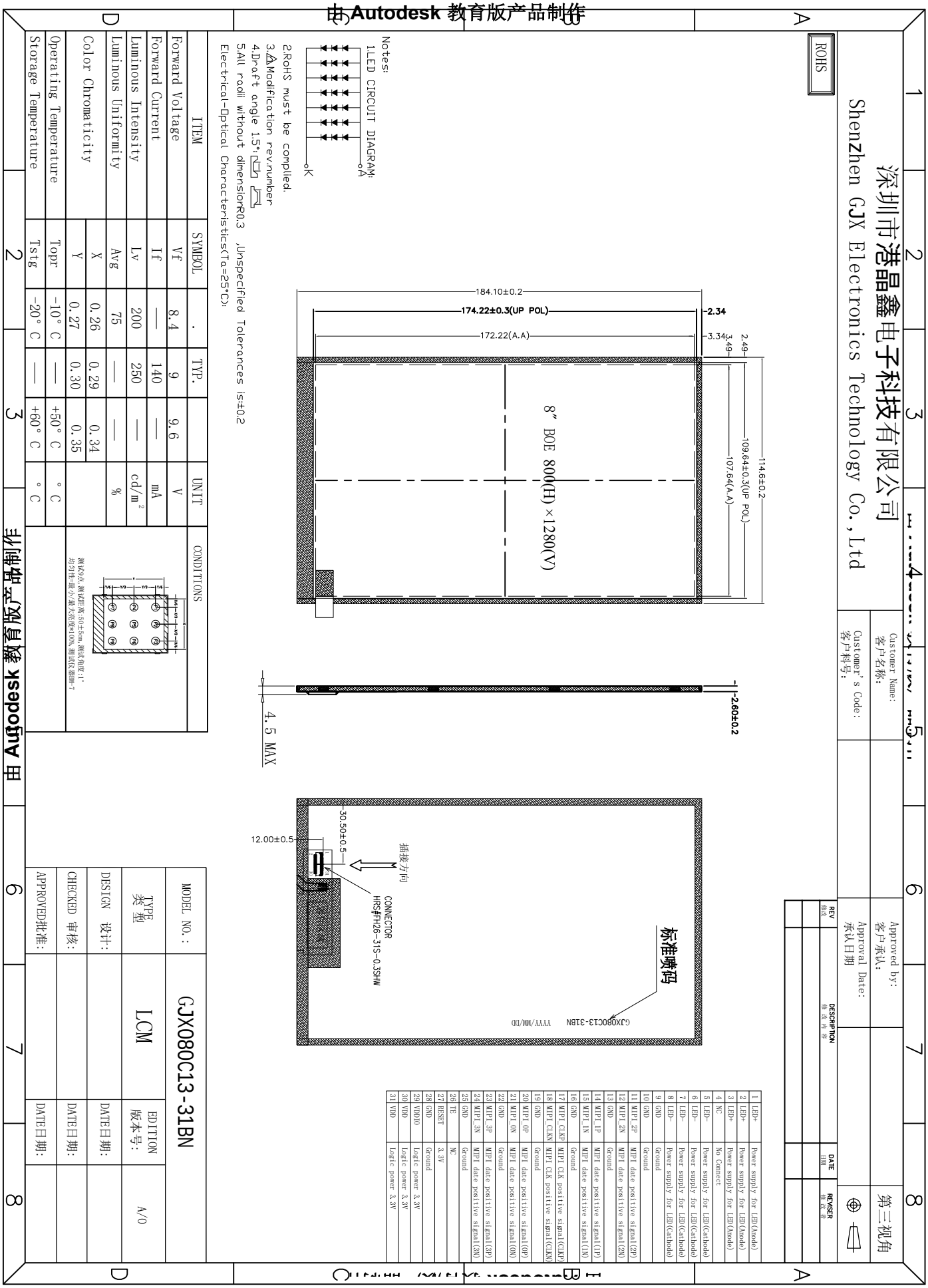

由 Autodesk 教育版产品制作

3. PIN DESCRIPTION

Pin No.	Symbol	Description	Remarks
1	LEDA	LED ANODE	
2	LEDA	LED ANODE	
3	LEDA	LED ANODE	
4	NC		
5	LEDK	LED CATHODE	
6	LEDK	LED CATHODE	
7	LEDK	LED CATHODE	
8	LEDK	LED CATHODE	
9	GND	Ground	
10	GND	Ground	
11	D2P	MIPI differential data input	
12	D2N	MIPI differential data input	
13	GND	Ground	
14	D1P	MIPI differential data input	
15	D1N	MIPI differential data input	
16	GND	Ground	
17	DCLKP	MIPI differential clock input	
18	DCLKN	MIPI differential clock input	
19	GND	Ground	
20	D0P	MIPI differential data input	
21	D0N	MIPI differential data input	
22	GND	Ground	
23	D3P	MIPI differential data input	
24	D3N	MIPI differential data input	
25	GND	Ground	
26	TE	NC	
27	RESET	3.3V	
28	GND	Ground	
29	VDDIO	Power supply 3.3V	
30	VDD	Power supply 3.3V	
31	VDD	Power supply 3.3V	

4. ELECTRICAL CHARACTERISTICS

Parameter	Symbol	Values			Unit	Notes
		Min	Typ	Max		
Power Supply Input Voltage	VDD	3.0	3.3	3.6	Vdc	
Logic Power Supply Input Voltage	VLOG	1.7	1.8	1.9	Vdc	
Power Supply Ripple Voltage	VRP		300		mV	
Power Supply Current	IDD	-	50	126	mA	1
Power Consumption	PDD		0.20	0.45	Watt	
Logic Power Supply Current	ILOG	16	18	20	mA	
Logic Power Consumption	PLOG		33		mW	
Rush current	IRUSH	-	1		A	2

Notes : 1. The supply voltage is measured and specified at the interface connector of LCM.
The current draw and power consumption specified is for VDD=3.3V, Frame rate f_V=60Hz and Clock frequency = 68.4MHz. Test pattern of power supply current is : typ@White, max@R/G/B
2. The duration of rush current is about 2ms and rising time of Power input is 1ms(min)

4.2 LED backlight specification(VSS=0V ,Ta=25℃)

Item	Symbol	Min	Typ	Max	Unit	Condition
Forward voltage	**Vf**	8.4	9	9.6	**V**	**If=140mA**
Luminance	**Lv**	200	250	-	**cd/m2**	**If=140mA**
Number of LED	--	**21**			**Piece**	--
Connection mode	**P**	3chips serial *7			--	--

5. Electrical Specification

5.1 MIPI Input Signal SPEC

< Table 5 MIPI Input Signal Spec>

Parameter	Symbol	Min	Typ	Max	Unit	Condition
MIPI digital operation current	I_{VCCIF}	16	18	20	mA	-
MIPI digital stand-by current	$I_{VCCIFST}$	-	200	-	uA	-
MIPI Characteristics for High Speed Receiver						
Single-ended input low voltage	V_{ILHS}	-40	-	-		
Single-ended input high voltage	V_{IHHS}	-	-	460	mV	
Common-mode voltage	V_{CMRXDC}	155	-	330	mV	
Differential input impedance	Z_{ID}	80	100	125	Ω	
HS transmit differential voltage (V_{OD}=V_{DP}-V_{DN})	$\|V_{OD}\|$	140	200	250	mV	
MIPI Characteristics for Low Power Receiver						
Pad signal voltage range	V_I	-50	-	1350	mV	
Ground shift	V_{GNDSH}	-50	-	50	mV	
Output low level	V_{OL}	-50	-	50	mV	
Output high level	V_{OH}	1.1	1.2	1.3	V	

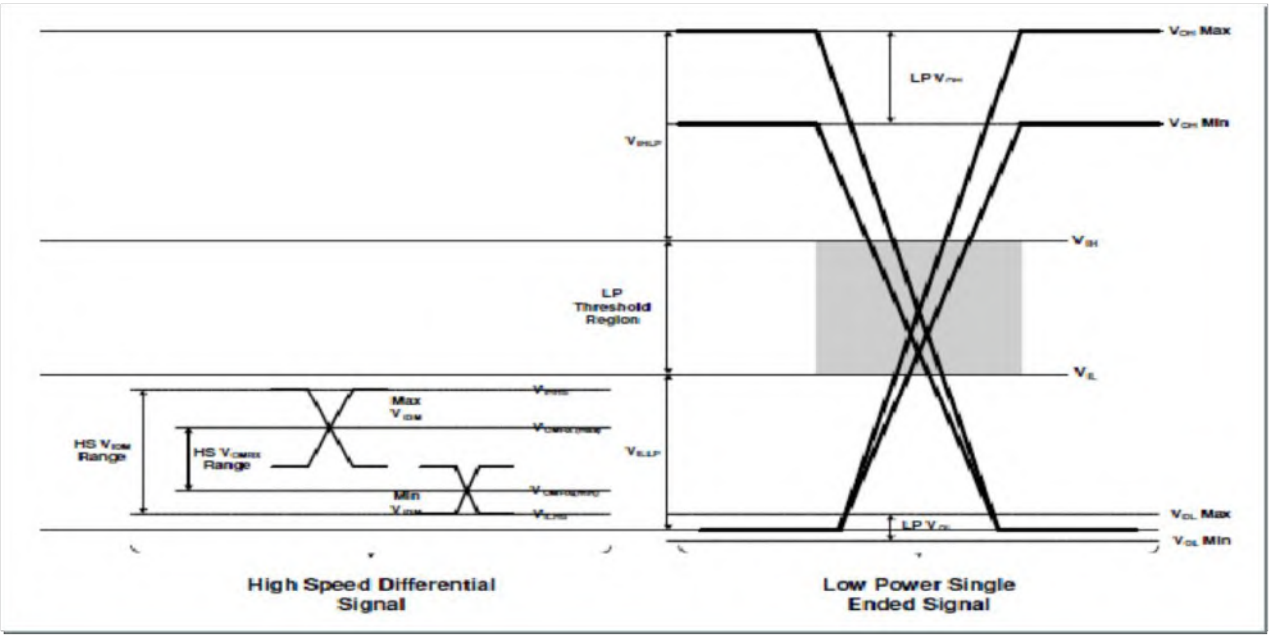

5.2 Signal Timing Spec

< Table 6 Signal Timing Spec>

Item	Symbol	Min	Typ	Max	Unit
Pixel CLK	Tpixclk		68.43		MHz
MIPI CLK	Period	-	2.22	-	ns
	Frequency	-	450	-	MHz
Hsync	Period	--	16	-	t_{pCLK}
	Frequency	-	77.76	-	KHz
Vsync	Period	-	4	-	Line
	Frequency	-	60	-	Hz
Horizontal Active Display Term rgb vporch 8 4 4 rgb hporch 16 48 16	HAdr	-	800	-	t_{pCLK}
	HBP	-	48	-	t_{pCLK}
	HFP	-	16	-	t_{pCLK}
	Total	-	880	-	t_{pCLK}
Vertical Active Display Term	Vadr	-	1280	-	Line
	VBP	-	4	-	Line
	VFP	-	8	-	Line
	Total	-	1296	-	Line

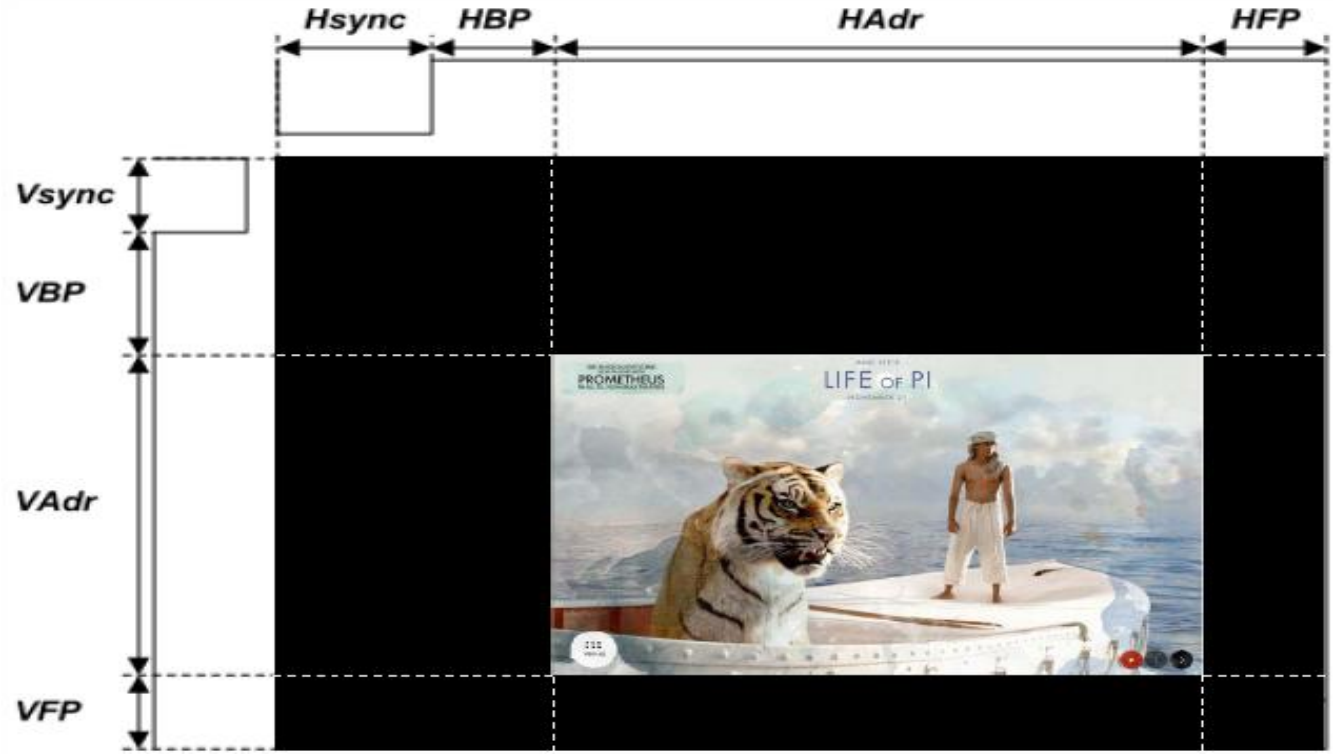

5.3 Power Sequence

To prevent a latch-up or DC operation of the LCD FOG, the power on/off sequence sh all be as shown in below

Power on/off sequence

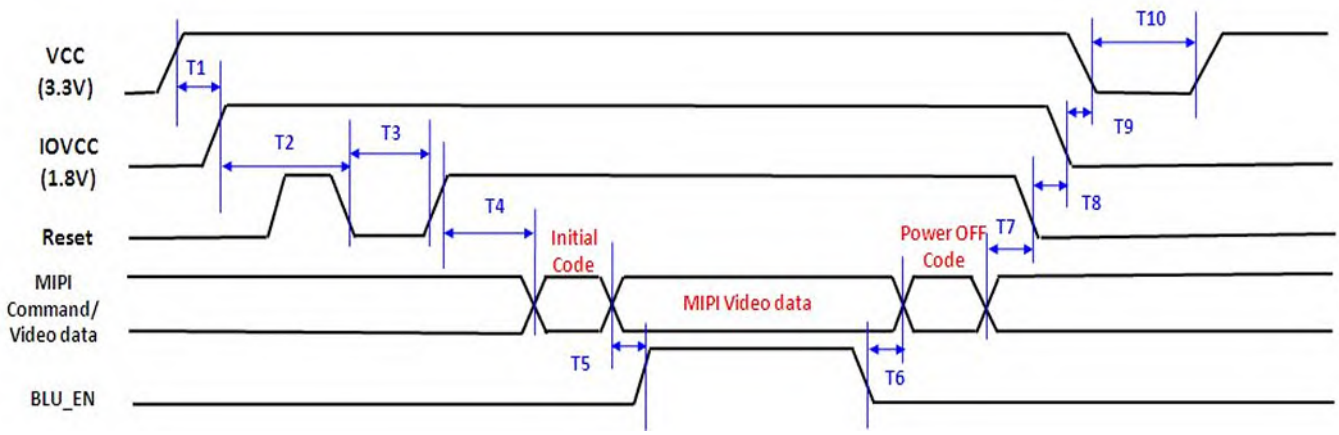

Power ON/OFF Timing			
Parameters	Value		
	min.	max.	Unit
T1	0.5	-	ms
T2	1	-	
T3	0.02	-	
T4	5	-	
T5	200	-	
T6	40	-	
T7	0	-	
T8	1	-	
T9	No Limit	-	
T10	500	-	

6. DC CHARACTERISTICS

MIPI Interface DC Characteristic

Item	Symbol	Condition	Min.	Typ.	Max.	Unit	Note
Power & Operation Voltage							
Analog operating voltage	VCI	-	2.5	2.8	6.6	V	
Analog operating voltage	VCIREF		2.5	2.8	6.6	V	
Digital operating voltage	VDDI	-	1.65	2.8	3.6	V	
Digital operating voltage	VCC1		1.65	2.8	6.6	V	
Digital operating voltage	VCC2		1.65	2.8	6.6	V	
DSI operating voltage	VDDAM	-	1.65	1.8	3.6	V	
OTP Supply voltage	MTP_PWR	-	8.4	8.5	8.6	V	
Analog operating voltage	VSP	-	4.5		6.6	V	
Analog operating voltage	VSN	-	-6.6		-4.5	V	
Logic High level input voltage	VIH	-	0.7*VDDI		VDDI	V	Note1
Logic Low level input voltage	VIL	-	-0.3		0.3*VDDI	V	Note1
Logic High level output voltage TE , LEDPWM	VOH	IOH = -1.0mA	0.8*VDDI		VDDI	V	Note1
Logic Low level output voltage TE , LEDPWM	VOL	IOL = +1.0mA	0		0.2*VDDI	V	Note1
Gate Driver High Voltage	VGH	-	8.0	-	18	V	
Gate Driver Low Voltage	VGL	-	-18.0	-	-7.0	V	
Driver Supply Voltage	-	|VGH-VGL|	15	-	32	V	
VCOM Operation							
DC VCOM Amplitude Voltage	VCOM	-	-4.0	-	0	V	Note3
Source Driver							
Source Output Range	VSOUT(+)	-	0.3	-	VREG1OUT-0.1	V	Note4
	VSOUT(-)	-	VREG2OUT +0.1	-	-0.3	V	Note4
Positive Gamma Reference Voltage	VREG1OUT	-	3.5	-	VSP-0.5 (VSP<=6.1) 5.6 (VSP>6.1)	V	
Negative Gamma Reference Voltage	VREG2OUT	-	VSN+0.5 (VSN>=-6.1) -5.6 (VSN<-6.1)	-	-3.5	V	
Source Output Setting Time	Tr	Below with 99% precision	-	10	-	uS	Note3.4
Output Deviation Voltage (Source Output channel)	Vdev	Sout>=4.2V Sout<=0.8V	-	-	20	mV	Note3
		4.2V>Sout>0.8V	-	-	15	mV	
Output Offset Voltage	VOFFSET	-	-	-	35	mV	Note3
Standby mode current consumption							
Sleep In mode	I(VDDI SLP IN)	Ta = 25 °C VCI=2.8V VDDI=1.8V	-	35	-	uA	
	I(VCI SLP IN)		-	25	-	uA	

7. OPTICAL SPECIFICATION

The test of Optical specifications shall be measured in a dark room (ambient luminance ≤ 1 lux and temperature = 25±2℃) with the equipment of Luminance meter system (Goniometer system and TO PCON BM-5) and test unit shall be located at an approximate distance 50cm from the LCD surface at a viewing angle of θ and Φ equal to 0°. We refer to $\theta_{Ø=0}$ (=θ_3) as the 3 o'clock direction (the "righ t"), $\theta_{Ø=90}$ (= θ_{12}) as the 12 o'clock direction ("upward"), $\theta_{Ø=180}$ (= θ_9) as the 9 o'clock direction ("lef t") and $\theta_{Ø=270}$(= θ_6) as the 6 o'clock direction ("bottom"). While scanning θ and/or Ø, the center of t he measuring spot on the Display surface shall stay fixed. The measurement shall be executed after 30 minutes warm-up period. VDD shall be 3.3V +/-10% at 25°C. Optimum viewing angle direction is 6 'clock.

< Table 7 Optical Spec>

Parameter		Symbol	Condition	Min	Typ	Max	Unit	Remark
Viewing Angle	Horizontal	Θ_3	CR > 10		85	-	Deg.	Note 1、6
		Θ_9			85	-	Deg.	
	Vertical	Θ_{12}			85	-	Deg.	
		Θ_6			85	-	Deg.	
Color Gamut			-	50	60	-	%	NTSC
Contrast ratio		CR	Θ = 0° (Center) Normal Viewing Angle	600:1	800:1	-		Note 2、6
Trans.		-		-	6.6	-	%	Note 3、6
Reproduction of color	White	Wx		TYP. - 0.03	0.30	TYP. + 0.03		Note 4、6
		Wy			0.32			
	Red	R_x			0.615			
		R_y			0.355			
	Green	G_x			0.34			
		G_y			0.6			
	Blue	B_x			0.15			
		B_y			0.095			
Response Time		T_g		-	-	35	ms	Note 5、6
Gamma Scale				2.0	2.2	2.4		Note 6

Note :

1. Viewing angle is the angle at which the contrast ratio is greater than 10. The viewing are determined for the horizontal or 3, 9 o'clock direction and the vertical or 6, 12 o'clock direction with respect to the optical axis which is normal to the LCD surface.

2. Contrast measurements shall be made at viewing angle of θ= 0° and at the center of the LCD surface. Luminance shall be measured with all pixels in the view field set first to white, then to the dark (black) state. (See FIGURE 1 shown in Appendix) Luminance Contrast Ratio (CR) is defined mathematically.

$$CR = \frac{\text{Luminance when displaying a white raster}}{\text{Luminance when displaying a black raster}}$$

3. Center Luminance of white is defined as luminance values of center point of the LCD surface. Luminance shall be measured with all pixels in the view field set first to white. When the LED current is set at 20mA .

4. The color chromaticity coordinates specified in Table 7. shall be calculated from the spectral data measured with all pixels first in red, green, blue and white. Measurements shall be made at the center of the panel.

5. The electro-optical response time measurements shall be made as FIGURE 2 shown in Appendix by switching the "data" input signal ON and OFF. The times needed for the luminance to change from 10% to 90% is Td, and 90% to 10% is Tr.

6. The listed optical specifications refer to the initial value of manufacture, but the condition of the specifications after long-term operation will not be warranted

Figure 1. Measurement Set Up

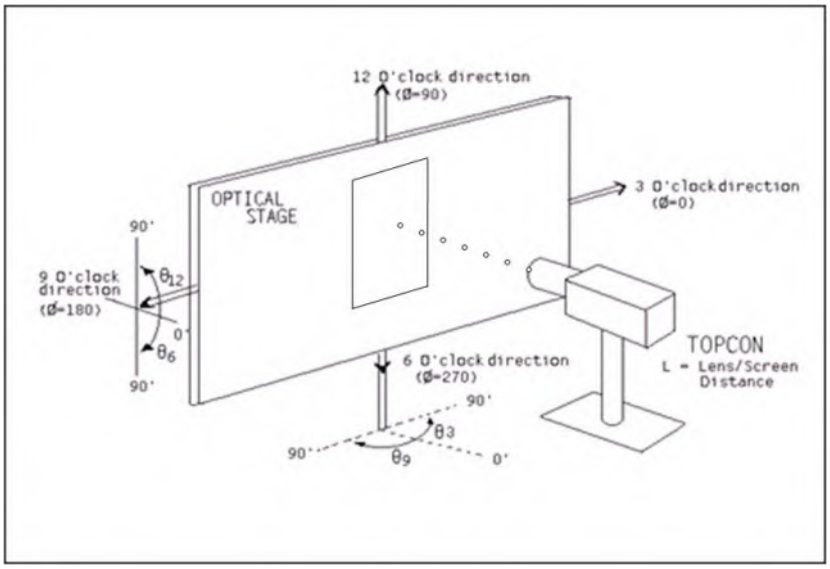

Figure 2. Response Time Testing

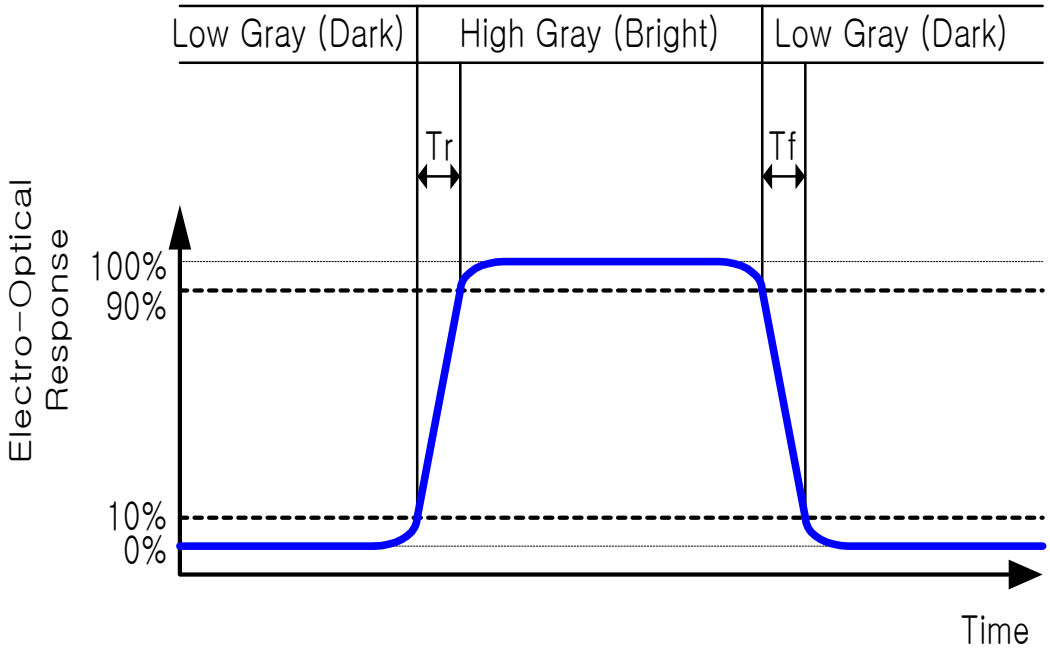

8.RELIABILITY TEST ITEMS

8.1 TEMPERATURE AND HUMIDITY

Test Item	Test Condition	Remark
High Temperature Storage	Ta=60℃; 72hrs	IEC60068-2-1：2007 GB2423.2-2008
Low Temperature Storage	Ta=-20℃; 72hrs	IEC60068-2-1：2007 GB2423.1-2008
High Temperature Operation	Ta=50℃; 72hrs	IEC60068-2-1：2007 GB2423.2-2008
Low Temperature Operation	Ta=-10℃; 72hrs	IEC60068-2-1：2007 GB2423.1-2008
High Temperature High Humidity Operation	Ta=50℃，90%RH， 72Hrs(no condensation)	IEC60068-2-78：2001 GB/T2423.3-2006
Thermal Shock	-20℃(0.5h) ~ 60℃(0.5h) / 10cycles	Start with cold temperature， End with high temperature， IEC60068-2-14:1984,GB2423.22-2002
Image Sticking	25℃ ; 2hrs	Note1

Note1:Condition of image sticking test :25℃±2℃
Operation with test pattern sustained for 2hrs,then change to gray pattern immediately.after5 mins,themura must be disappeared completely

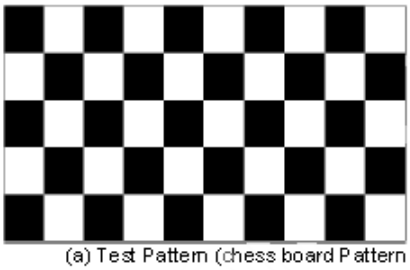
(a) Test Pattern (chess board Pattern)

(b) Gray Pattern

8.0.2ESD

Test item	Conditions	Remark	
Electro Static Discharge Test (non-operation)	150pF，330Ω， Contact:±3KV,Air:±8KV	1	IEC61000-4-2：2001 GB/T17626.2-2006
	200pF，0Ω，±200V contact test	2	

Note: Measure point :
1. LCD glass and metal bezel
2. IF connector pins

9. General Precaution

9.1 Safety

1. Do not swallow any liquid crystal, even if there is no proof that liquid crystal is poisonous.
2. If the LCD panel breaks, be careful not to get liquid crystal to touch your skin.
3. If skin is exposed to liquid crystal, wash the area thoroughly with alcohol or soap.

9.2 Storage Conditions

1. Store the panel or module in a dark place where the temperature is 23±5°C and The humidity is below 50±20%RH.
2. Store in anti-static electricity container.
3. Store in clean environment, free from dust, active gas, and solvent.
4. Do not place the module near organics solvents or corrosive gases.
5. Do not crush, shake, or jolt the module.

9.3 Handling Precautions

1. Avoid static electricity which can damage the CMOS LSI.
2. The polarizing plate of the display is very fragile. So, please handle it very carefully.
3. Do not give external shock.
4. Do not apply excessive force on the surface.
5. Do not wipe the polarizing plate with a dry cloth, as it may easily scratch the Surface of plate.
6. Do not use ketonics solvent & Aromatic solvent, use with a soft cloth soaked with a cleaning naphtha solvent.
7. Do not operate it above the absolute maximum rating.
8. Do not remove the panel or frame from the module.
9. When the module is assembled, it should be attached to the system firmly, Be careful not to twist and bend the module.
10. Wipe off water droplets or oil immediately. If you leave the droplets for a long time, staining and discoloration may occur.
11. If the liquid crystal material leaks from the panel, it should be kept away from the eyes or mouth in case of contact with hands, legs or clothes, it must be washed away thoroughly with soap.

9.4 Warranty

1. The period is within twelve months since the date of shipping out under normal using and storage conditions.
2. Do not repaired or modified the LCM. It may cause function to lose efficacy, Starry does not warrant the LCM.
3. All process and material comply ROHS.
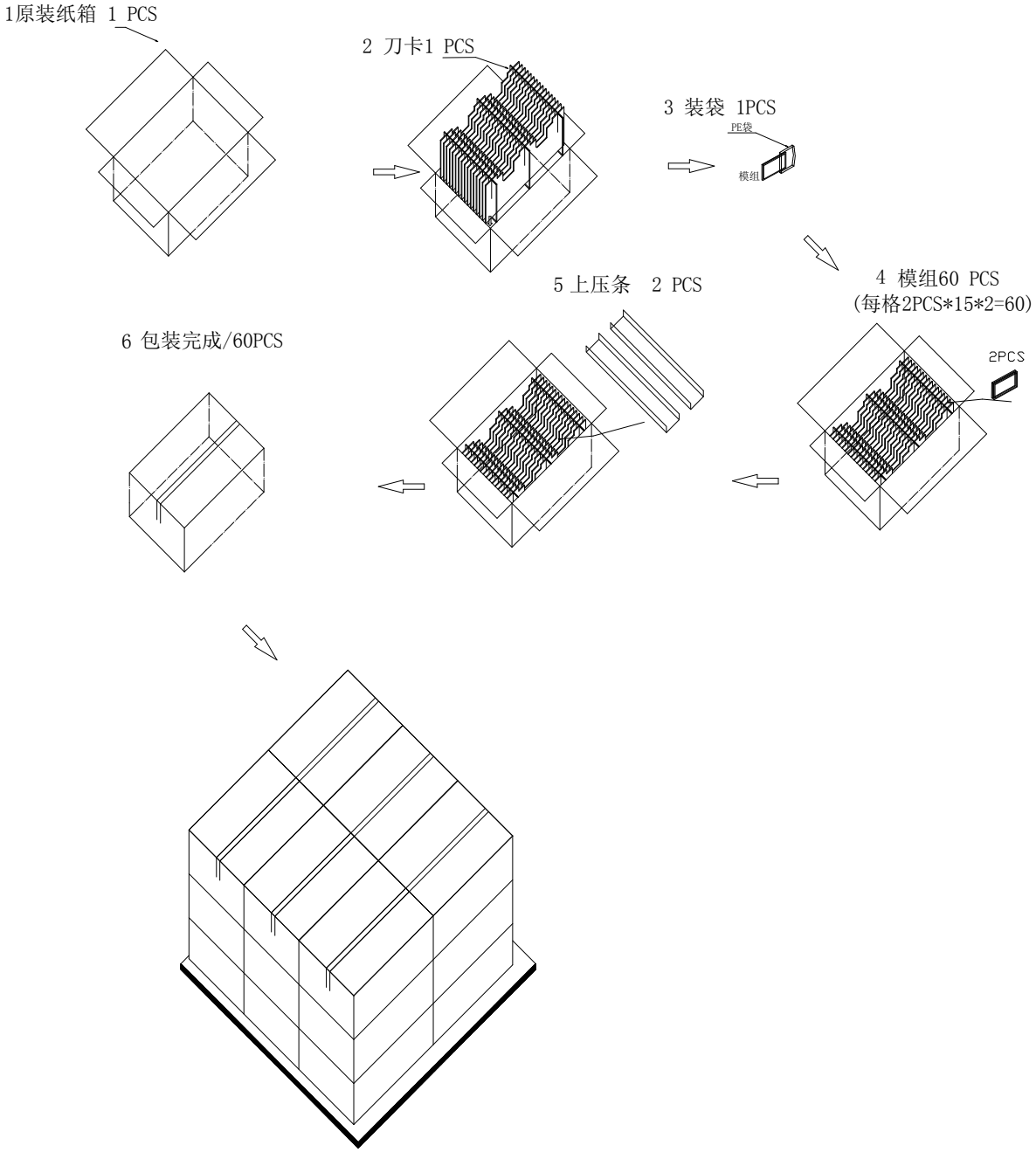
10.PACKAGE DRAWING