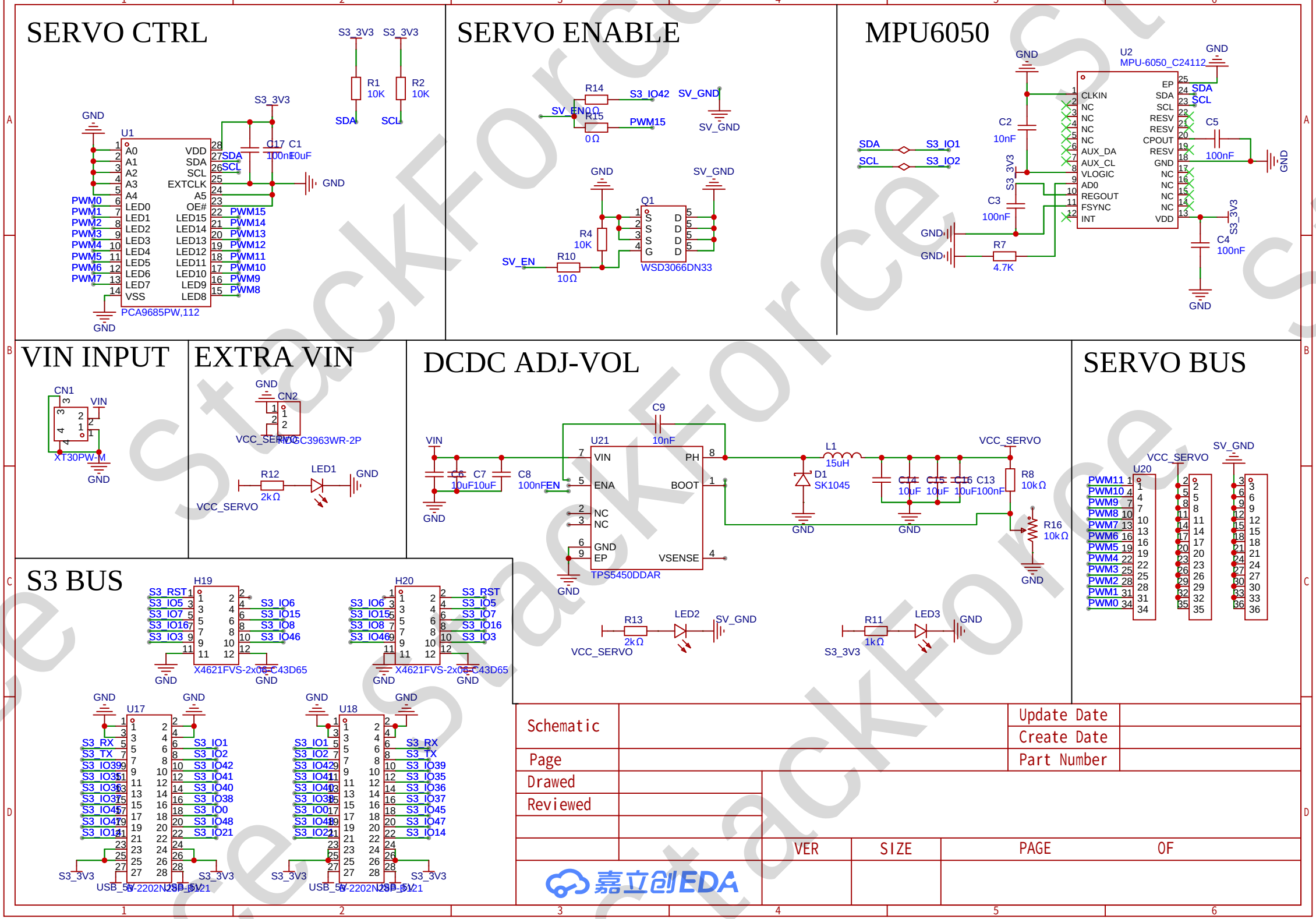
SERVO CTRL
U1
PCA9685PW,112
S3_3V3
R1 10K
R2 10K
SDA
SCL
C17 100nF
C1 10uF
GND
PWM0
PWM1
PWM2
PWM3
PWM4
PWM5
PWM6
PWM7
PWM8
PWM9
PWM10
PWM11
PWM12
PWM13
PWM14
PWM15
SERVO ENABLE
R14 0Ω
R15 0Ω
S3_IO42
SV_GND
PWM15
Q1
WSD3066DN33
R4 10K
R10 10Ω
SV_EN
MPU6050
U2
MPU-6050_C24112
C2 10nF
C3 100nF
R7 4.7K
C5 100nF
C4 100nF
S3_IO1
S3_IO2
S3_3V3
VIN INPUT
CN1
XT30PW-M
VIN
EXTRA VIN
CN2
VCC_SERVO
R12 2kΩ
LED1
DCDC ADJ-VOL
U21
TPS5450DDAR
C9 10nF
C6 10uF
C7 10uF
C8 100nF
EN
L1 15uH
D1 SK1045
C14 10uF
C15 10uF
C16 10uF
C13 100nF
R8 10kΩ
R16 10kΩ
R13 2kΩ
LED2
R11 1kΩ
LED3
SERVO BUS
U20
S3 BUS
H19
H20
X4621FVS-2x06-C43D65
U17
U18
USB_5V-2202N28B-5V21
Schematic
Page
Drawed
Reviewed
Update Date
Create Date
Part Number
VER
SIZE
PAGE
OF
嘉立创EDA